UK SCAN 68

UK - ASSEMBLY AND INSTRUCTIONS MANUAL

SCAN 68

SCAN®

ASSEMBLY AND INSTRUCTIONS MANUAL SCAN 68

CONGRATULATIONS ON YOUR NEW SCAN WOOD-BURNING STOVE

You have purchased a product by one of Europe's leading manufacturers of wood-burning stoves, and we are sure that you will have years of pleasure from your purchase.

To make the best possible use of your stove, it is important that you follow our advice and instructions. Read through this Assembly and Instruction Manual carefully before you start to assemble your stove.

SCAN 68-2

Wall hung model
Without side windows
Aluminium mouldings

SCAN 68-7

Wall hung model
With side windows
Black mouldings

SCAN 68-8

Wall hung model
With side windows
Aluminium mouldings

SCAN 68-3

Pedestal
Without side windows
Black mouldings

SCAN 68-4

Pedestal
Without side windows
Aluminium mouldings

SCAN 68-9

Pedestal
With side windows
Black mouldings

SCAN 68-10

Pedestal
With side windows
Aluminium mouldings

SCAN 68-11

Portal
With side windows
Black mouldings

SCAN 68-12

Portal
With side windows
Aluminium mouldings

SCAN 68-13

Steel sides
Without side windows
Black mouldings

SCAN 68-14

Steel sides
Without side windows
Aluminium mouldings

SCAN 68-15

Soapstone
Without side windows
Black mouldings

TABLE OF CONTENTS

TECHNICAL DATA 6

Installation 6
Safety 6
CO monitor 6
Technical data and dimensions 7
Dimension 8
Type plate 11
Product registration number 12

ASSEMBLY 12

Loose parts 12
Additional accessories 12
Disposal of packaging 12
Fresh air intake 13
Closed combustion system 13
Existing chimney and pre-fabricated element chimney 14
Connection between stove and steel chimney 14
Requirements for chimney 14
Load-bearing foundation 15
Floor plate 15
Positioning your wood-burning stove 15
Distance to furniture 15
Safety distance 15
Distance to flammable materials 16
Distance to firewall 17
Removal of packaging 18
Height adjustment of stove 19
Connecting piece 19
Mounting of the burn chamber on the pedestal basel 20
Mounting of the burn chamber on the portal basel 21
Mounting of the storage door for the portal unit 22
Mounting of wall-hung model 23
Removal of the self-closing door spring 27
Mounting of external air supply on the wall fitting 27
Fitting natural stone 28

INSTRUCTIONS FOR USE 29

CB-technology (Clean Burn) 29
Primary air 29
Secondary air 29
Baffle plate 29
Ash container 29
The Clean Air Act 1993 and Smoke Control Areas 29
Handle for riddling grate 30
Refueling on to a low fire bed 30
Operation with door left open 30
Dampers left open 30

INSTRUCTIONS FOR HEATING 31

Environmentally friendly operation 31
Lighting 31
Continuous operation 32
Warning about over-firing 32
Using your stove in various weather conditions 32
Firing in the spring or autumn 32
The function of the chimney 32
Chimney fire 32
General notes 33

HANDLING OF THE FUEL 34

Selecting wood/fuel 34
Preparation 34
Storing 34
Moisture 34
Use of the following as fuel is illegal 34
Calorific value of the wood 34

MAINTAINANCE 35

TROUBLESHOOTING 39

WARRANTY 40

MOUNTING THE UK-SCREW 41

TECHNICAL DATA

INSTALLATION

- The house owner is responsible for ensuring that installation and assembly are in accordance with national and local building regulations as well as the information provided in this Assembly and Instructions Manual.
- When you install any kind of fireplace or stove, you must inform the local building and housing authorities. In addition you are obliged to have the installation inspected and approved by a local chimney sweep prior to commissioning.
- To ensure best-possible functionality and safety for your installation, we advise you to call a professional fitter. Your Scan dealer will be able to recommend a qualified fitter in your area. For information on Scan Dealers, please go to www.scan-stoves.com.

SAFETY

Any changes made to the product by the dealer, fitter or user could result in the product and safety functions not functioning as intended. The same applies to the fitting of accessories or extra equipment not supplied by Scan A/S. This could also be the case if parts that are necessary for the operation and safety of the stove are dismantled or removed.

CO MONITOR

An approved CO monitor should be fitted in the same room as the appliance.

PLEASE NOTE!

YOU GET THE BEST USE OF THE STOVE BY USING A TOP-DOWN LIGHTING METHOD

SEE "INSTRUCTIONS FOR HEATING"

TECHNICAL DATA AND DIMENSIONS

Materials	Steel plate Cast iron Galvanised sheet Vermicolite
Surface treatment	Senotherm
Max. wood length	ca. 33 cm
Weight Scan 68-2/7/8	ca. 98 kg
Weight Scan 68-3/4/9/10	ca. 105 kg
Weight Scan 68-11/12	ca. 107 kg
Weight Scan 68-13/14	ca. 110 kg
Weight Scan 68-15	ca. 190 kg
Connecting piece internal diameter	144 mm
Connecting piece external diameter	148 mm
Approval type	Intermittent fuelling*

* Intermittent operation in this context means normal use of a wood-burning stove. In other words, you should let the fire die down until only the embers are left before refueling.

This stove is produced in accordance with type approval for the product, which also covers the product's Assembly and Instruction Manual.

The Declaration of Performance (DoP) is available from www.scan-stoves.com

Test in compliance with EN 13240		
CO Emission at 13% O_2	0,06	%
CO Emission at 13% O_2	785	mg/Nm^3
Dust @ 13% O_2	12	mg/Nm^3
No_x @ 13% O_2	91	mg/Nm^3
Efficiency	79	%
Energy efficiency index	105	
Energy efficiency class	A	
Nominel output	5	kW
Chimney temperature EN 13240	248	°C
Amount of smoke	5,3	g/sek
Sub-pressure EN 13240	12	Pa
Recommended sub-pressure in connecting piece	17	Pa
Required combustion air supply	16,2	m^3/h
Fuel		Wood
Fuel consumption	1,6	kg/h
Amount of fuel	1,4	kg

DIMENSION SCAN 68-2, 68-7 AND 68-8 (WALL HUNG MODEL)

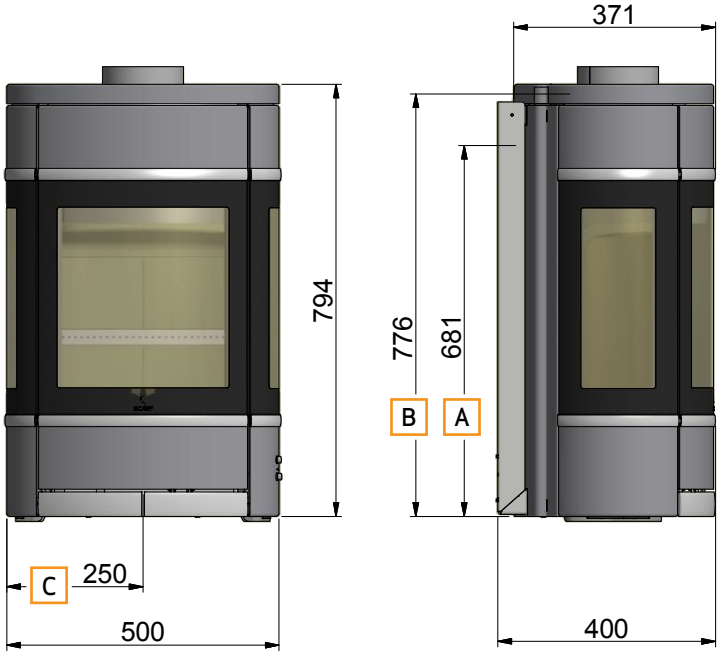

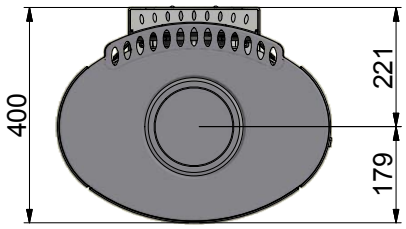

A Centre rear outlet

B Height to the beginning of the connecting piece at top outlet

C Centre of fresh air intake

All measurements are in millimeters

DIMENSION SKETCH SCAN 68-3, 68-4, 68-9 AND 68-10 (PEDESTAL)

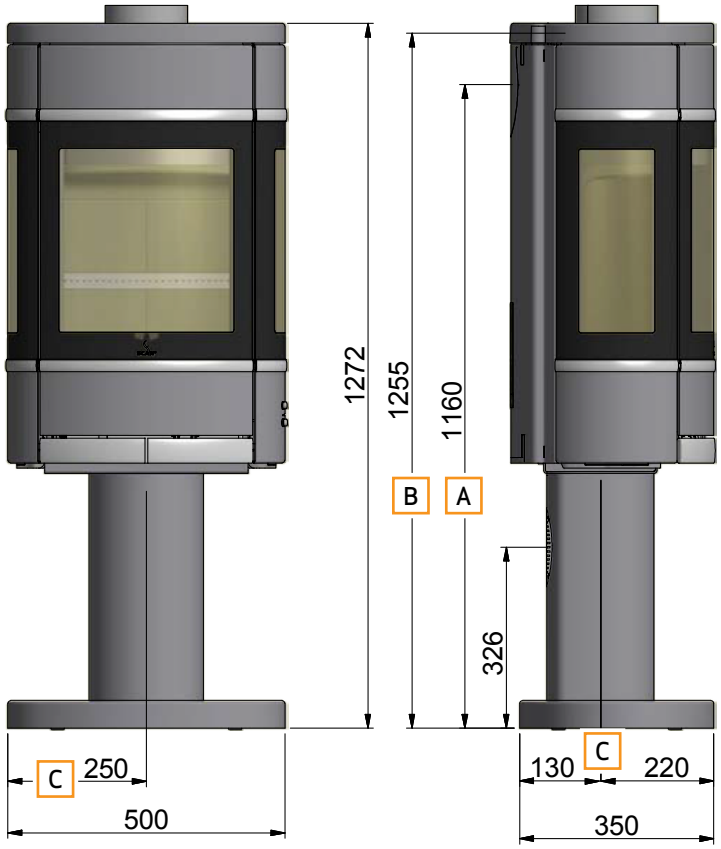

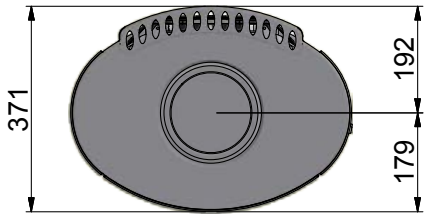

A Centre rear outlet

B Height to the beginning of the connecting piece at top outlet

C Centre of fresh air intake

All measurements are in millimeters

DIMENSION SKETCH SCAN 68-11 AND 68-12 (PORTAL)

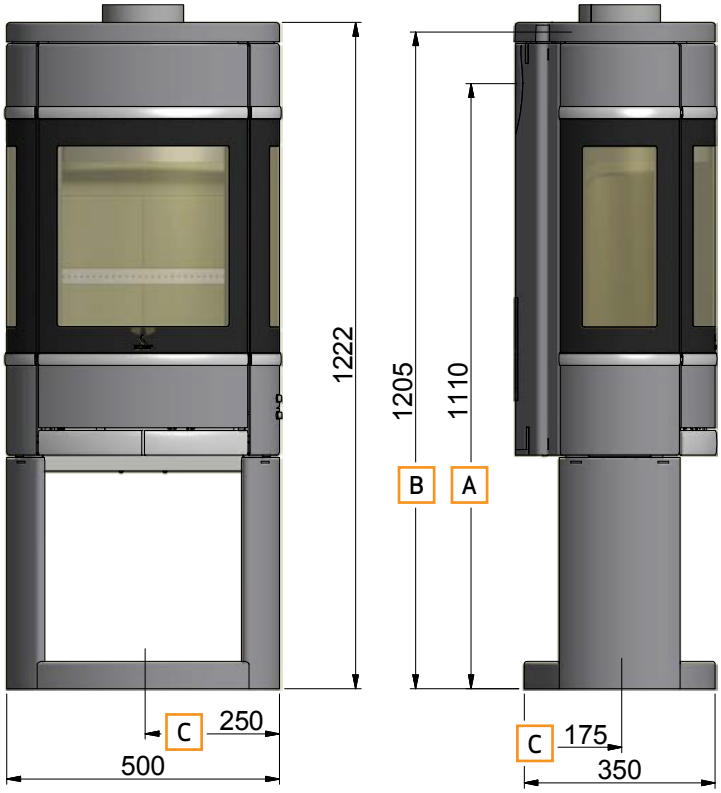

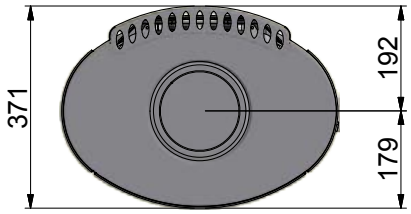

A Centre rear outlet

B Height to the beginning of the connecting piece at top outlet

C Centre of fresh air intake

All measurements are in millimeters

DIMENSION SKETCH 68-13 AND 68-14 (STEEL SIDES)

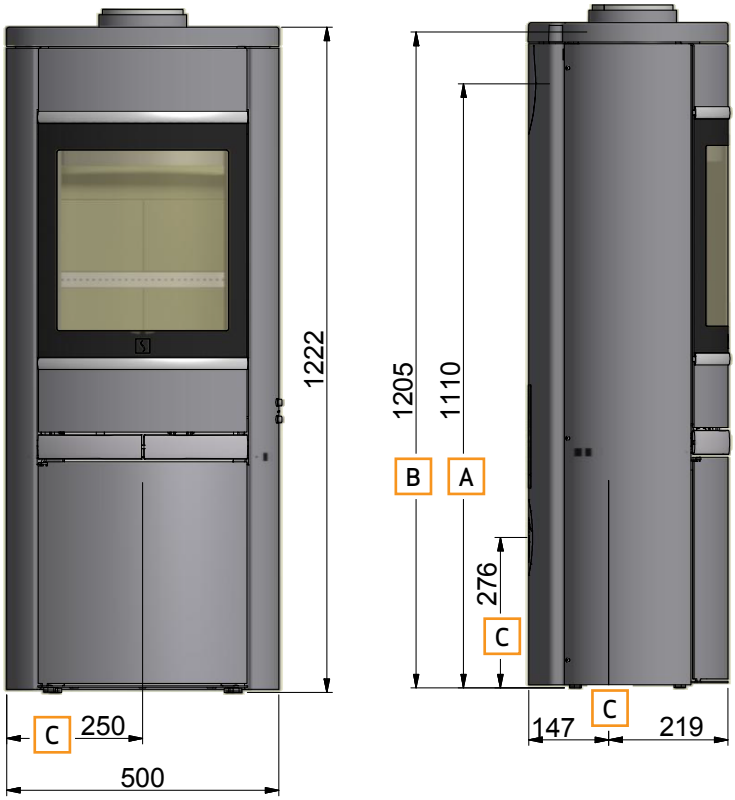

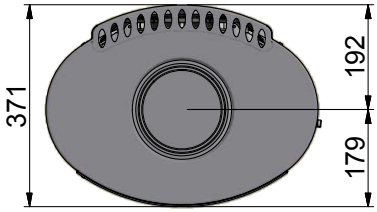

A Centre rear outlet

B Height to the beginning of the connecting piece at top outlet

C Centre of fresh air intake

All measurements are in millimeters

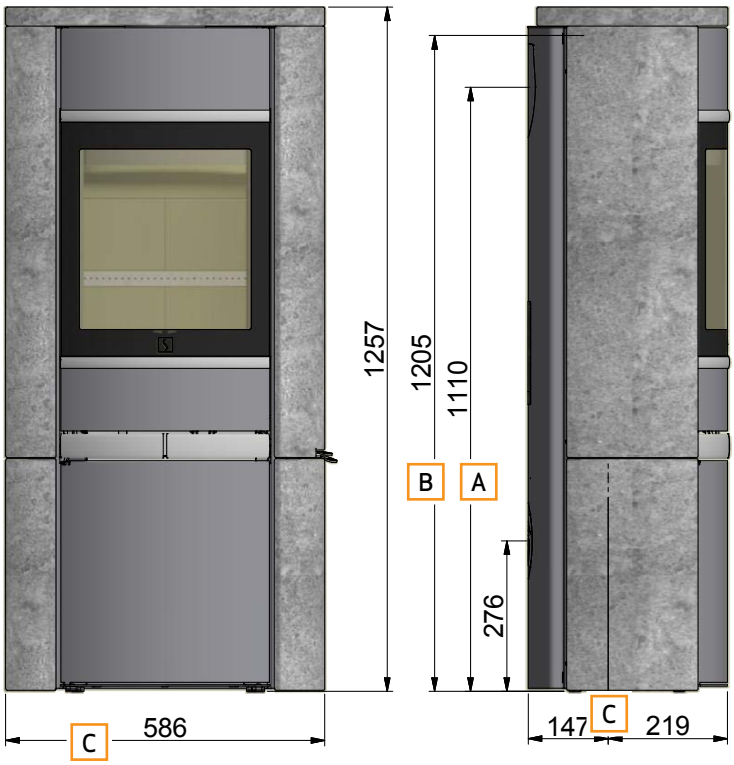

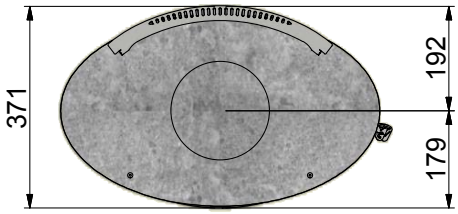

A Centre rear outlet

B Height to the beginning of the connecting piece at top outlet

C Centre of fresh air intake

All measurements are in millimeters

TYPE PLATE

All Scan wood-burning stoves are fitted with a type plate that specifies the approval standards and the distance to flammable materials.

The type plate for UK must be stuck on top of the existing type plate. Please do not cover the product registration number.

Typeplates

Product:

Scan 68-2UK
Scan 68-3UK
Scan 68-4UK
Scan 68-13UK
Scan 68-14UK
Scan 68-15UK

UK CA CE 22

Freestanding room heater fired by solid fuel **DoP: 90068602**

Standard: BS EN 13240:2001/A2:2004:AC:2007

Minimum distance to adjacent combustible materials:
Side: 400 mm - Back: 150 mm - Front: 1100 mm

Emission of CO in combustion products (13% O_2)	: 785 mg/Nm3
Emission of NOx in combustion products (13% O_2)	: 91 mg/Nm3
Emission of OGC in combustion products (13% O_2)	: 62 mg/Nm3
Emission of PM in combustion products (13% O_2)	: 12 mg/Nm3
Flue gas temperature	: 248 °C
Nominal heat output	: 5 kW
Efficiency	: 79 %
Fuel type	: Wood
Operation type	: Intermittent
Reaction to fire	: A1

The appliance should not be installed in a shared flue
Approved by: DTI, NB.no 1235

Follow user's instructions.
Use only recommended fuels.

Manufacturer: Scan A/S - DK 5492 Vissenbjerg

12055838 90068656

Cut off this part and place the label on the top of the existing plate.
Please do not cover the product registration number.

Product:

Scan 68-7UK
Scan 68-8UK
Scan 68-9UK
Scan 68-10UK
Scan 68-11UK
Scan 68-12UK

UK CA CE 22

Freestanding room heater fired by solid fuel **DoP: 90068603**

Standard: BS EN 13240:2001/A2:2004:AC:2007

Minimum distance to adjacent combustible materials:
Side: 500 mm - Back: 150 mm - Front: 950 mm

Emission of CO in combustion products (13% O_2)	: 785 mg/Nm3
Emission of NOx in combustion products (13% O_2)	: 91 mg/Nm3
Emission of OGC in combustion products (13% O_2)	: 62 mg/Nm3
Emission of PM in combustion products (13% O_2)	: 12 mg/Nm3
Flue gas temperature	: 248 °C
Nominal heat output	: 5 kW
Efficiency	: 79 %
Fuel type	: Wood
Operation type	: Intermittent
Reaction to fire	: A1

The appliance should not be installed in a shared flue
Approved by: DTI, NB.no 1235

Follow user's instructions.
Use only recommended fuels.

Manufacturer: Scan A/S - DK 5492 Vissenbjerg

12055839 90068657

Cut off this part and place the label on the top of the existing plate.
Please do not cover the product registration number.

PRODUCT REGISTRATION NUMBER

All Scan wood-burning stoves are provided with a product registration number. You will always need to quote this number when contacting your dealer or Scan A/S.

The product registration number is located at the rear of the stove.

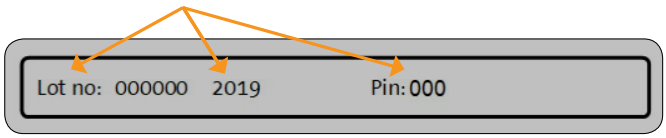

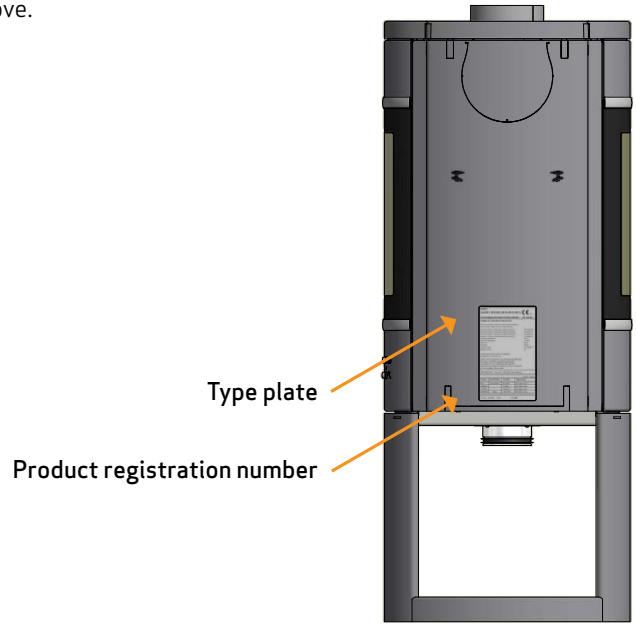

ASSEMBLY

LOOSE PARTS

- Glove
- Connecting piece 6"
- Seal
- Allen key (5 mm) for inspection holes
- Dekor ring for top outlet
- 4 Screw M5 x 10 mm
- 1 Pass Screw M5 x 10 mm (UK) - Please see instructions

ADDITIONAL ACCESSORIES

- Small shaped floor plate in glass or steel
- Storage door for the portal unit
- Adjustment key for height adjustment
- Large shaped floor plate in glass or steel
- Connecting piece for inside flue pipe, 6"

DISPOSAL OF PACKAGING

Your Scan stove may come supplied with the following packaging:

Wood packaging	The wood packaging can be reused and after final use can be incinerated as a CO_2 neutral product or sent for recycling
Foam	Send for recycling or waste disposal
Plastic bags	Send for recycling or waste disposal
Stretch/plastic film	Send for recycling or waste disposal

FRESH AIR INTAKE

In a well-insulated house the air used for the combustion process has to be replaced. This particularly applies to houses with mechanical ventilation. There are different ways of making sure that air is exchanged. The most important thing is to ensure that there is a supply of air to the room where the wood stove is located. The external wall vent must be located as close to the wood stove as possible, and you must be able to close it when you are not using the stove.

National and local building regulations must be followed with regard to connection of a fresh air intake.

CLOSED COMBUSTION SYSTEM

You should use the closed combustion system for the wood-burning stove if you live in a newly-built, airtight home. External combustion air is connected through a ventilation pipe via the wall or floor.

We recommend mounting a valve in the ventilation pipe in order to avoid condensate in the stove and the pipe system, which can be closed when the oven is not in use. It can also be an advantage to insulate the ventilation pipe.

Minimum Ø100 mm ventilation pipe, maximum length: 6 meters with a maximum of one bend. We recommend smooth steel pipes.

If you want external combustion air via a wall, remove the cover plate at the rear of the stove with a pair of cutting pliers. See the procedure in this manual.

If the external combustion air is connected at the rear, the dismounted plate must be mounted on the hole for external air in the bottom of the stove.

NOTE: If the stove has a fresh air connection or closed combustion, the ventilation pipe must be open, when the stove is in use.

The external air supply can be connected through the pedestal or the portal by mounting the delivered connecting piece.

PEDESTAL

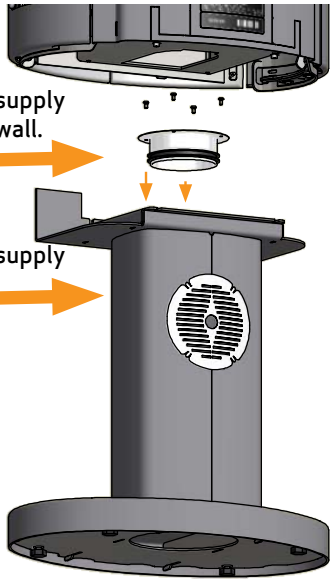

PORTAL

If you want to connect an external air supply from the bottom of the base, remove the blind flange and mount it at the top of the base. Then mount the delivered connecting piece under the base as shown below.

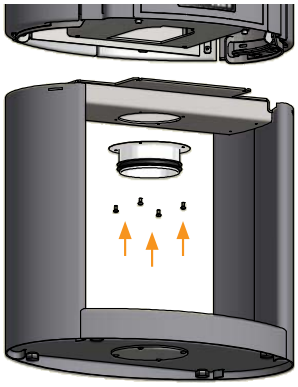

EXISTING CHIMNEY AND PRE-FABRICATED ELEMENT CHIMNEY

If you intend to connect your stove to an existing chimney, it makes sense to contact an authorised Scan dealer, or a local chimney sweep, for advice. These experts will also let you know if your chimney needs renovating.

- When connecting a pre-fabricated element chimney, follow the manufacturer's connection instructions for the relevant chimney type

CONNECTION BETWEEN STOVE AND STEEL CHIMNEY

Your Scan dealer, or local chimney sweep, can advise you on choosing a make and type of steel chimney (we recommend using JØTUL's chimney system). This ensures that the chimney will match your wood-burning stove.

REQUIREMENTS FOR CHIMNEY

The chimney must have a diameter of min. 148 mm and be labelled T400 and G for soot testing. The length should be min. 4 metres.

If you opt to connect the stove with an elbow pipe, you should use a curved elbow, as this gives a better draught.

When using a steel chimney, we recommend that it is equipped with an inspection door.

If you connect the stove with a sharp elbow pipe, the cleansing lid must be placed in the vertical part so that the horizontal part can be cleaned through here.

If the chimney is fitted with a smoke extractor, it must be possible to adjust it to a suitable draft.

The requirements to the chimney and the flue pipe in terms of safety distances must be met.

- Choosing the wrong length or diameter of steel chimney could impair functionality.
- Always observe the chimney vendor's instructions precisely.

LOAD-BEARING FOUNDATION

All items in our product range come under the category of lightweight fireplaces and stoves and do not normally require any reinforcement of the beam structure. They can be positioned on ordinary beams/floor.

You should of course make sure that the foundation on which the stove is positioned can indeed support the weight of the stove and, where applicable, a steel chimney, if you have opted for this solution. In case of doubt about the carrying capacity of the floor, please consult a building expert.

FLOOR PLATE (ACCESSORY)

If you are placing the stove on a flammable floor, you must comply with the national and local regulations on the size of any non-flammable subsurface required to cover the floor around the stove.

Your local Scan dealer can advise you on regulations concerning protection of flammable materials in the vicinity of your stove.

The floor plate's function is to protect the floor and flammable material against any sparks that may occur. A floor plate can be made of steel or glass, but the stove can also be erected on clinker concrete, natural stone or similar materials.

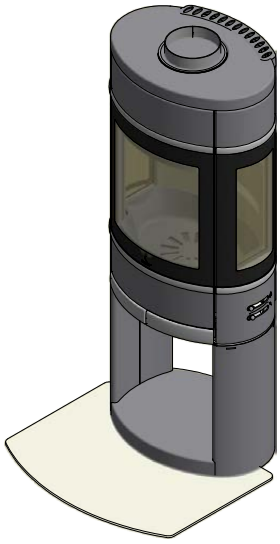

Small shaped floor plate in glass or steel.

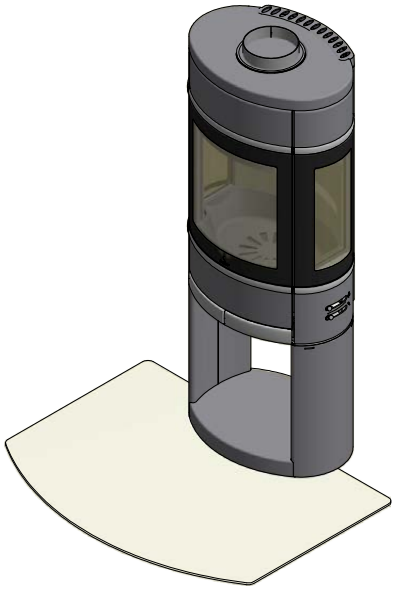

Large shaped floor plate in glass or steel

POSITIONING YOUR WOOD-BURNING STOVE

There are no requirements concerning the distance to non-combustible materials, but we recommend a distance of 50 mm in order to facilitate the cleaning of the stove, the flue pipe and the chimney, and to prevent possible damages to the wall.

DISTANCE TO FURNITURE

With side windows: 950 mm - Without side windows: 1100 mm

You should however assess whether furniture or other items might become excessively dry due to being too close to the stove.

SAFETY DISTANCE

European, national and local regulations concerning safety distances for wood-burning stoves and flue pipes must be complied with.

DISTANCE TO FLAMMABLE MATERIALS, SHOWN WITH **UN-INSULATED** FLUE PIPE

45° Corner installation

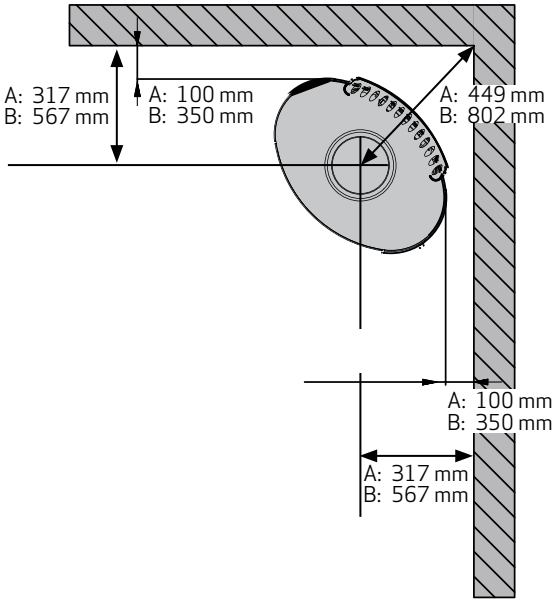

Parallel rear wall installation

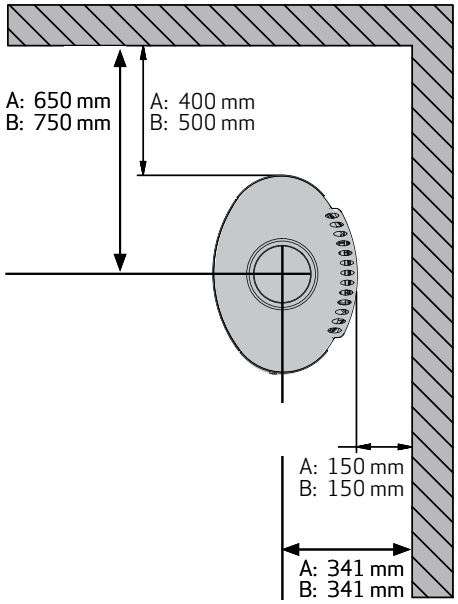

DISTANCE TO FLAMMABLE MATERIALS, SHOWN WITH **INSULATED** FLUE PIPE

These distances apply for an insulated flue pipe all the way down to the stove.

45° Corner installation

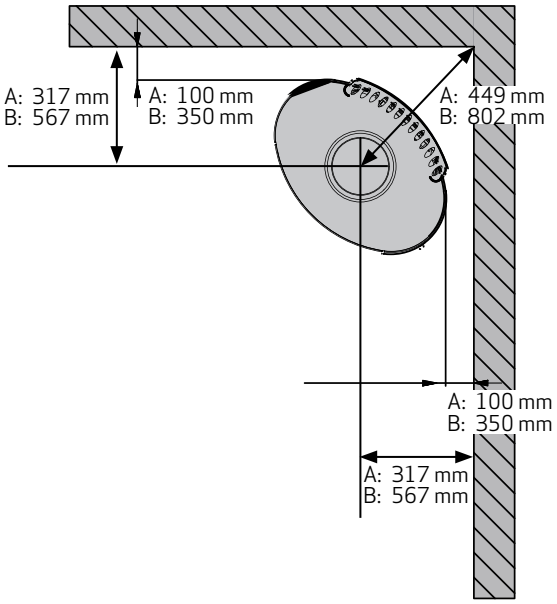

Parallel rear wall installation

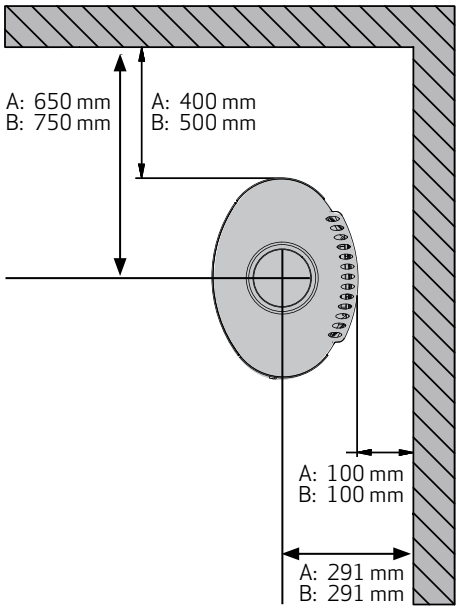

A = Without side windows

B = With side windows

DISTANCE TO FIREWALL

110 mm brick, 50 mm JØTUL Firewall or other material with a corresponding insulation ability.

The indicated distances are valid for insulated as well as un-insulated smoke pipes.

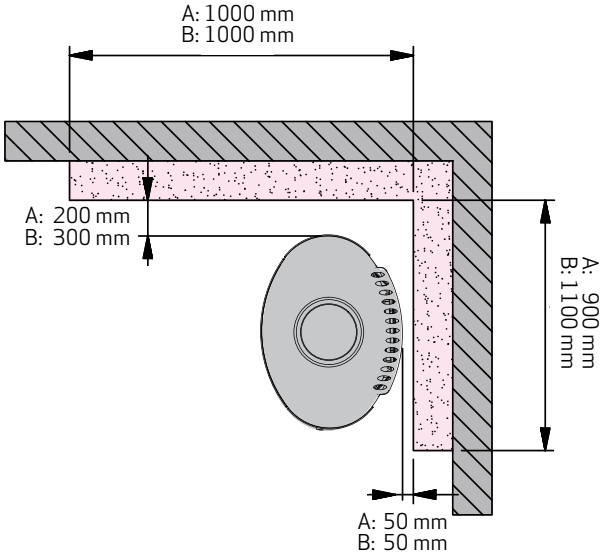

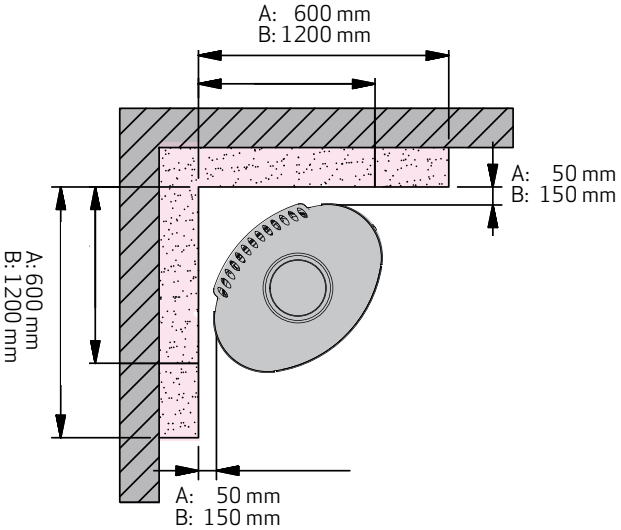

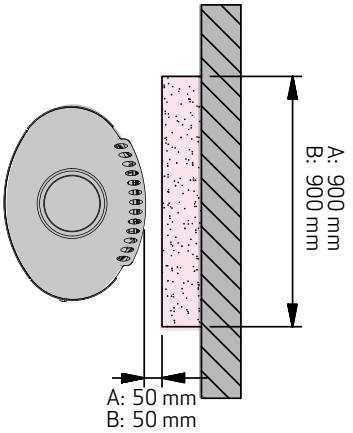

A = Without side windows

B = With side windows

Firewall:

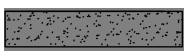

Flammable material

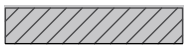

REMOVAL OF PACKAGING

Check that the stove is not damaged before starting to install it.
The stove comes attached to a wooden pallet on delivery.

Please remove protection 1

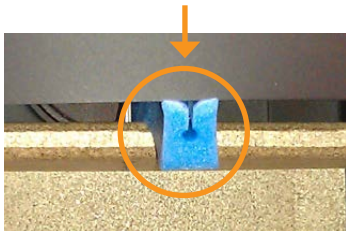

2

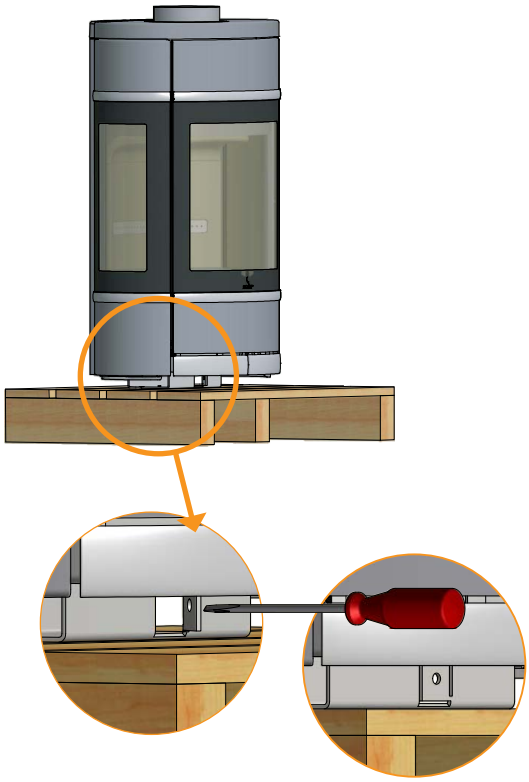

Pull back and lift 3

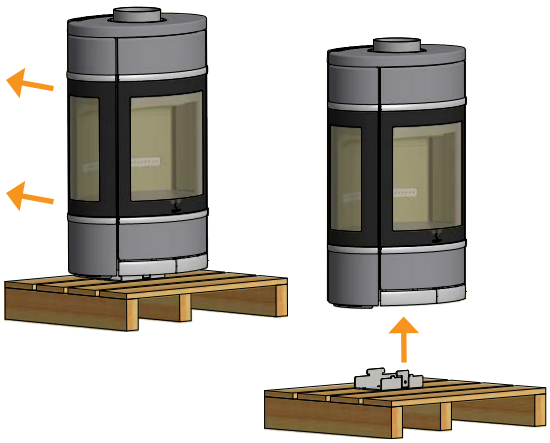

Remove the two screws in the wood compartment and lift the stove off the pallet 4

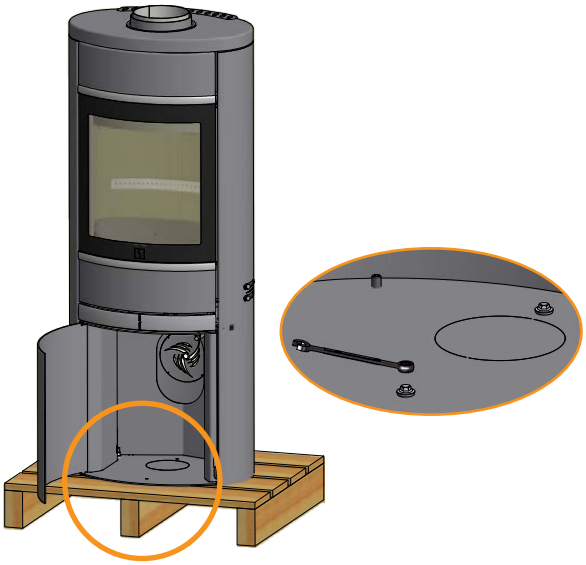

HEIGHT ADJUSTMENT OF STOVE

The Scan 68 has four adjustment screws under the stove.
Use the adjustment screws and the adjustment key (Accessories) to get the stove to stand straight and level.

If the floor plate is used, the stove must be adjusted so that the plate can be placed under the front of the stove.

NOTICE: It is very important that the stove is level to allow an optimal function of the door. Please note that once mounted the stove can no longer be adjusted!

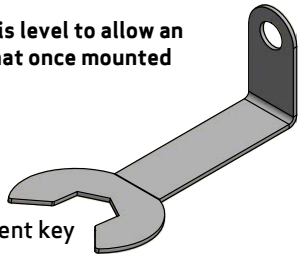

Ajustment key

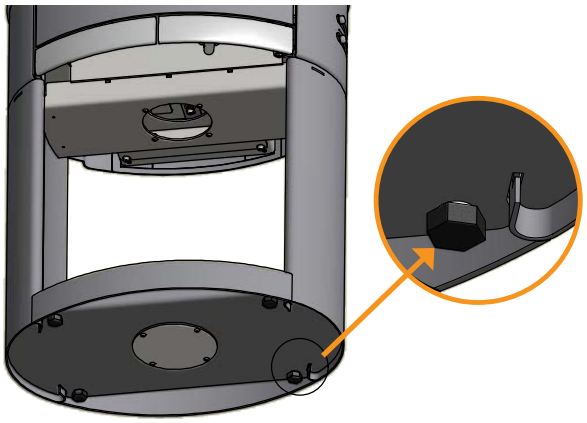

CONNECTING PIECE

TOP OUTLET

The stove is prepared from the factory for top outlet

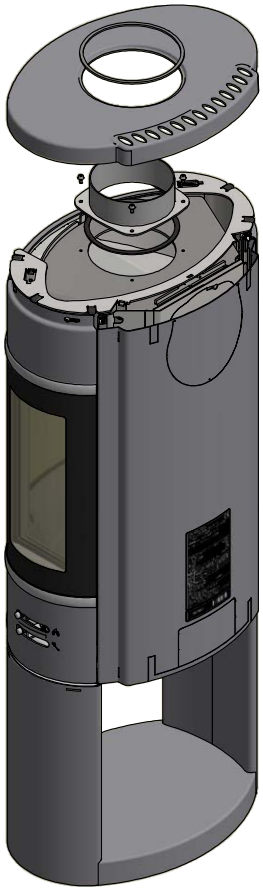

REAR OUTLET

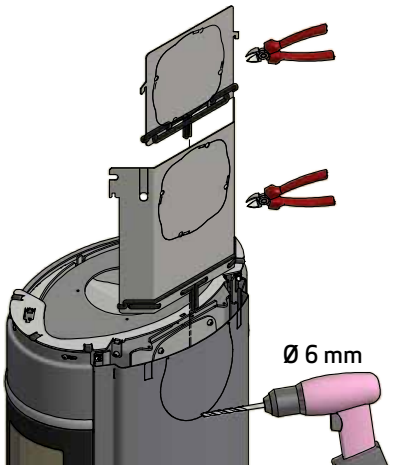

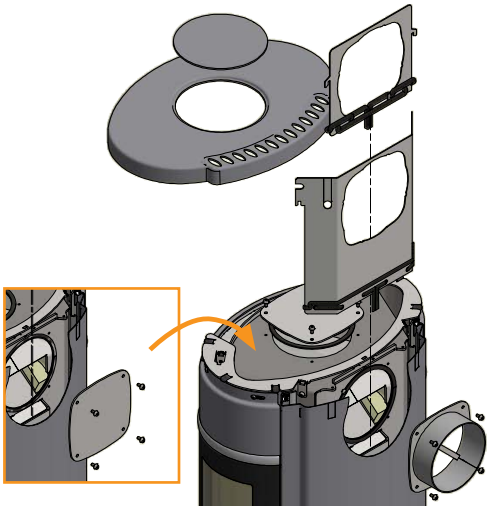

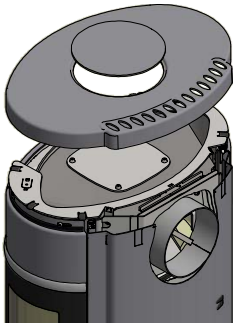

1

The stove is delivered with the screws mounted.
These must be removed before mounting the base

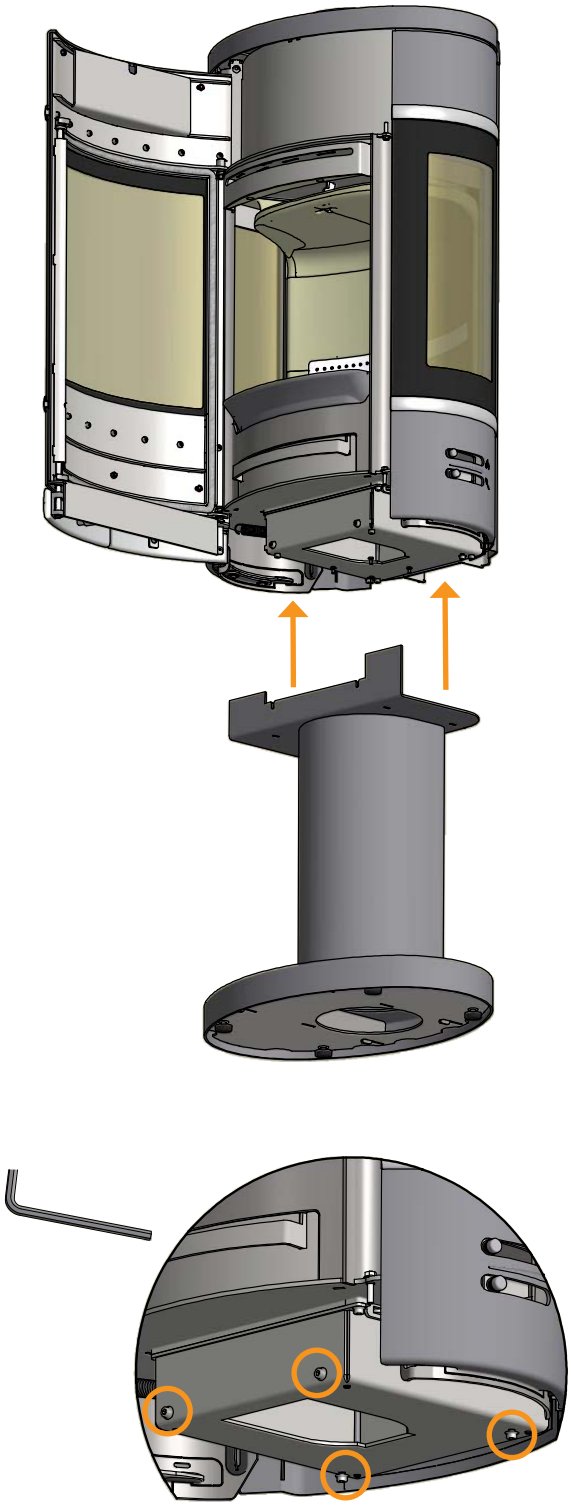

2

When the stove has been placed on the base,
the four screws must be remounted

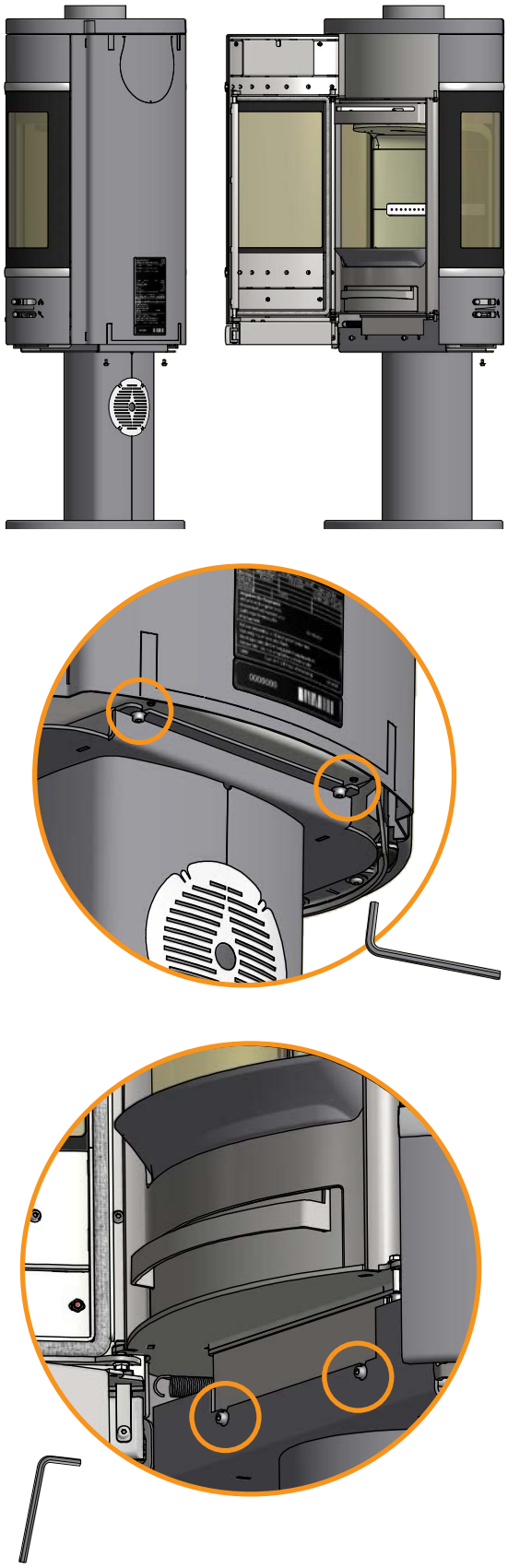

1

The stove is delivered with the screws mounted. These must be removed before mounting the base

2

When the stove has been placed on the base, the four screws must be remounted

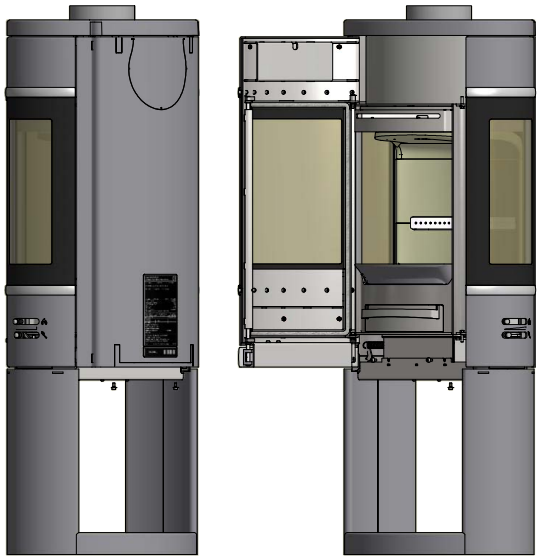

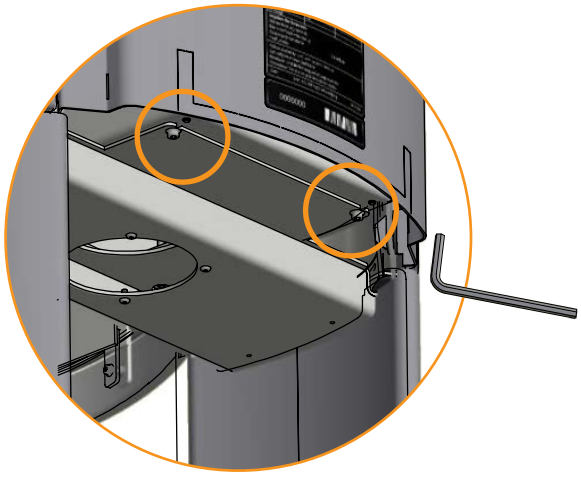

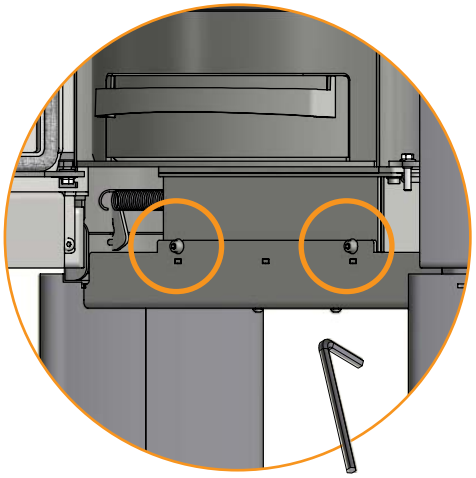

1

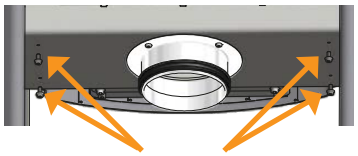

Remove the four screws under the stove before placing the door assembly

2

Dismount the door

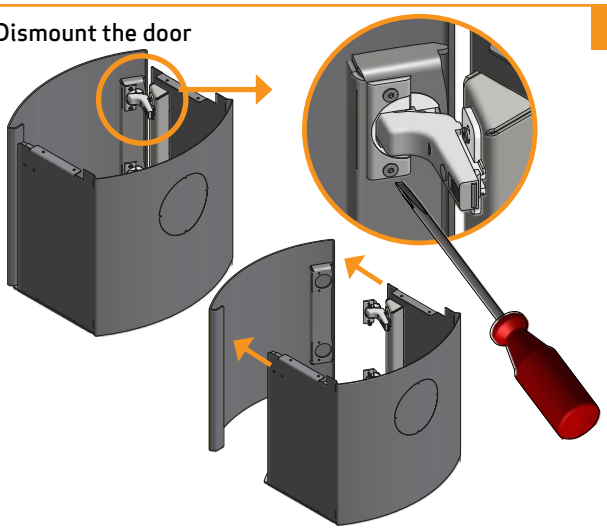

3

Carefully push the door assembly in from behind

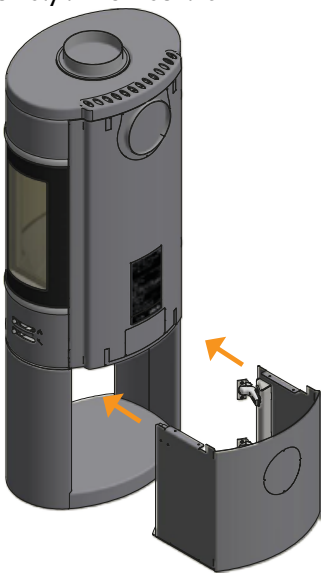

4

First mount the four screws at the top

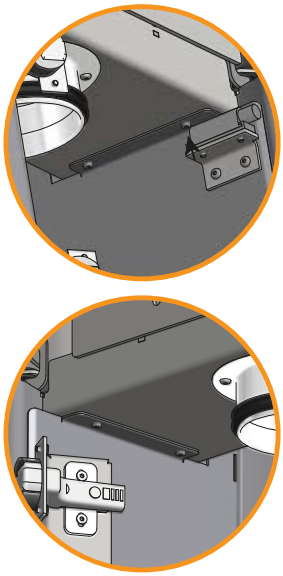

5

Remount the door

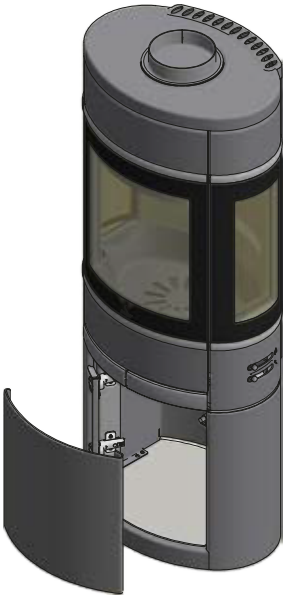

6

The 4 outer screws at the bottom are easily tightened

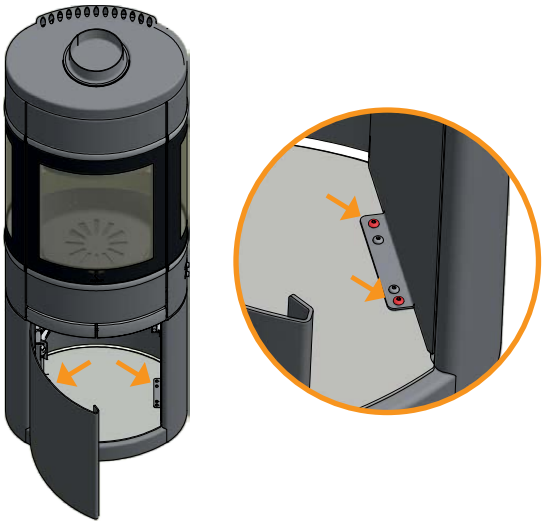

7

Rejust

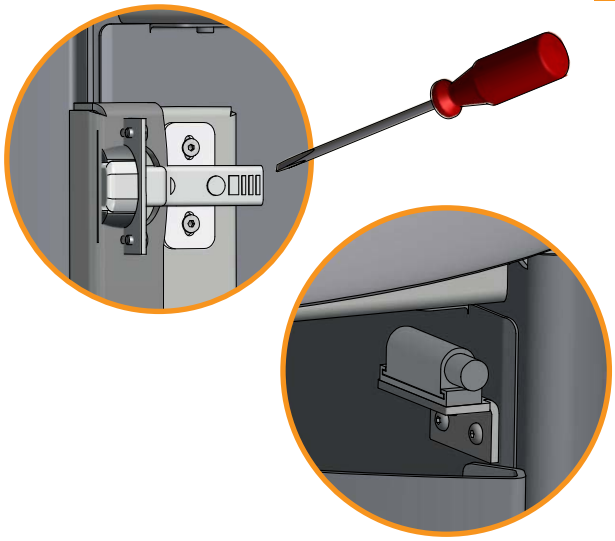

MOUNTING OF WALL-HUNG MODEL

Installation must be planned and executed in accordance with national and local building regulations.

The stove must only be fitted to a non-flammable wall. There must be no form of flammable component in the wall.

To ensure correct installation we recommend that a building expert and a local chimney sweep be commissioned to plan and outline the installation with a view to subsequent approval.

For wall installation we recommend using the wall brackets supplied.

If a chimney is installed on top of a wall-hung model, the chimney must be fully self-supporting. It must not rest on the wood-burning stove. There must be a distance of at least 6 mm between the first section and the flange on the flue collar. Please consult a specialist.

Scan A/S disclaims all liability for the installation of wall-hung wood-burning stoves.

Must be removed, also in the heat shield, for wall fitting

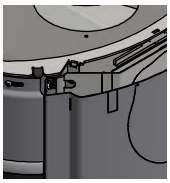

Must be removed for wall fitting

Is only to be removed for external air supply

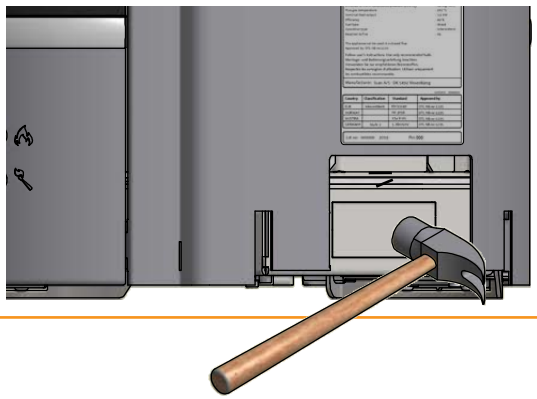

Use either a drilling machine with Ø 6 mm drill or cutting nippers to remove the illustrated plates

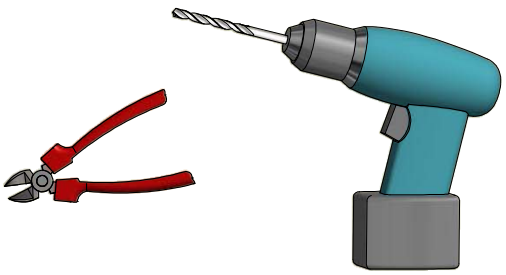

1

Remove the top plate

2

Remove the two screws as shown below

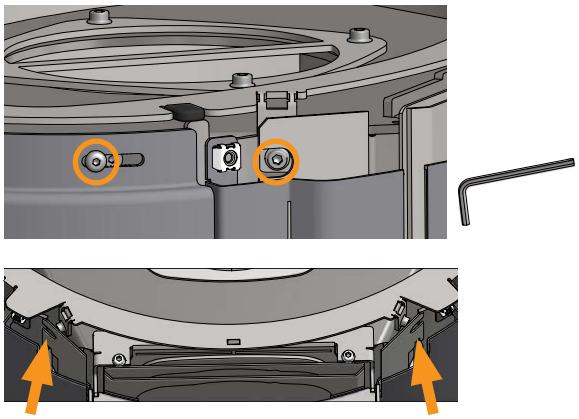

3

When the two screws have been removed, you can lift the guide plate and put the fitting underneath

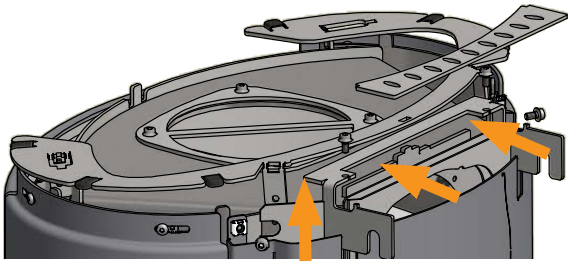

4

Fasten the fitting with two screws.

Remount the guide plate with the two screws

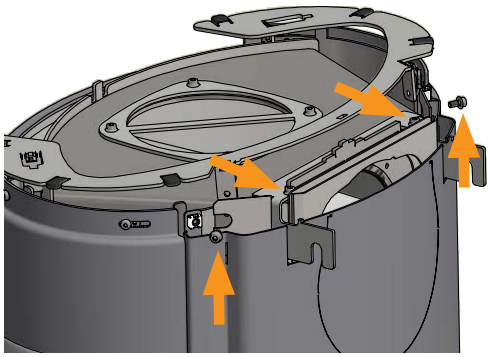

5

Mount the top plate and the decor grid

6

In order to mount the wall fitting to a chimney made of Leca-blocks you need 6 pcs. FBS 8x70/5 US Leca screws.

The test report can be required at Scan A/S

7

Draw a vertical line on the wall
(you can use a spirit level).

Use this line for the mounting of the wall fitting

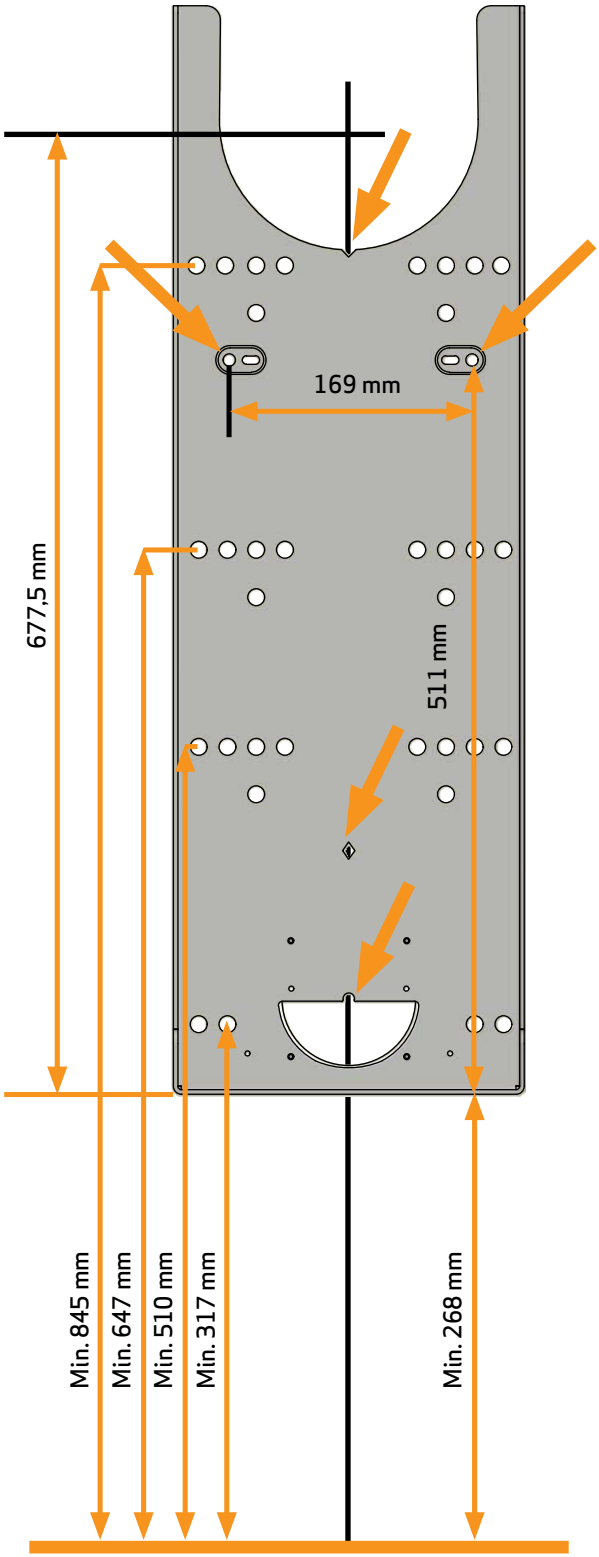

8

Measure from the vertical line and drill the holes

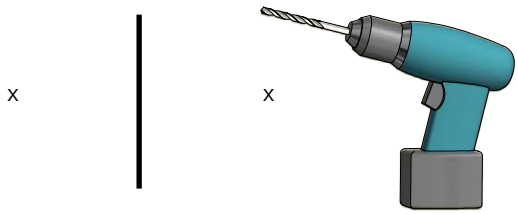

9

Mount the two guide blocks

10

Use the guide blocks to hold the wall fitting while adjusting it.

Use the line or a spirit level.

Drill the necessary holes and mount the screws

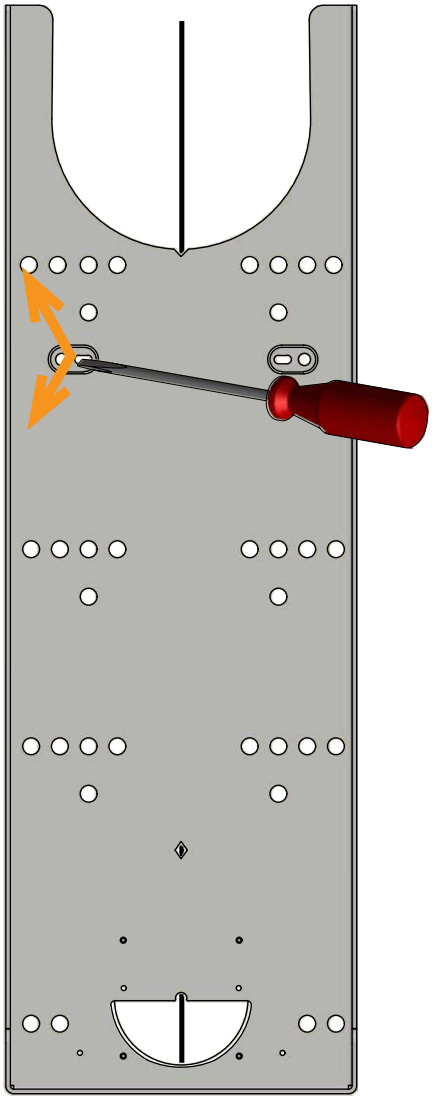

(Continued on next page)

11

Mount screw and disc.

If you want an external air supply, it should be mounted now. (See instructions in this manual)

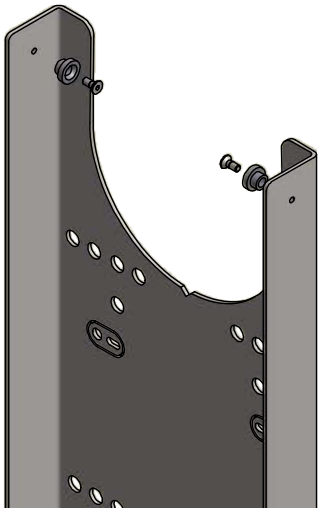

12

The two screws under the stove must be removed, before lifting the stove up on the wall fitting

Now the stove is ready to be mounted on the wall fitting

Hook the stove on the wall fitting

13

When the stove is in position, mount the two screws in the bottom and the loose decor grate on the top

14

If you want a rear outlet, see page 19 in this manual

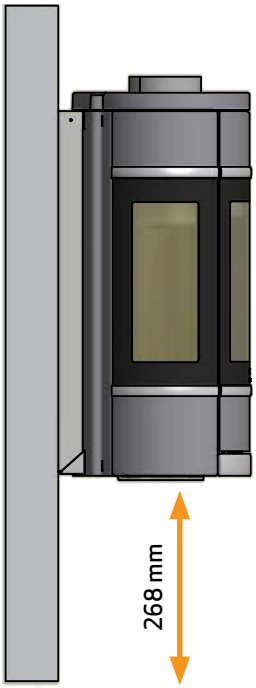

REMOVAL OF THE SELF-CLOSING DOOR SPRING

The stove is born with a spring that makes the door close automatically. This spring can easily be removed with a nipper.

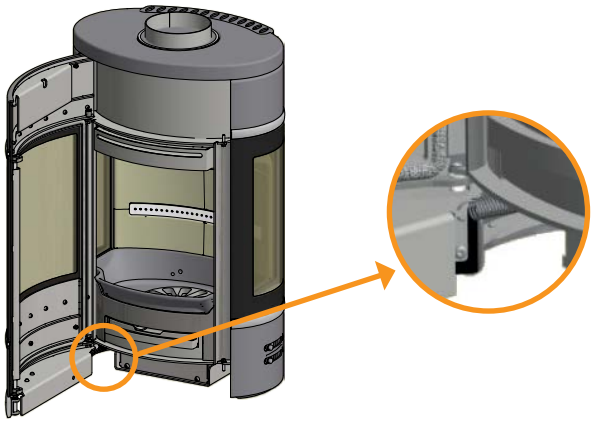

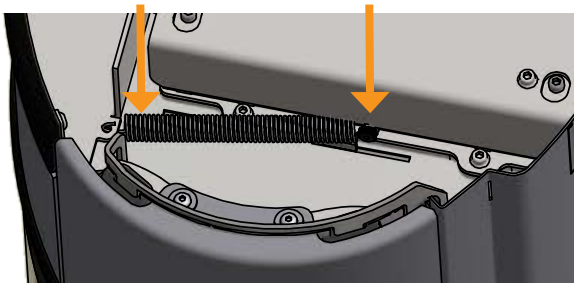

Bottom view

MOUNTING OF EXTERNAL AIR SUPPLY ON THE WALL FITTING

If you do not want an external air supply, it is not necessary to mount the duct tube or the connecting piece.

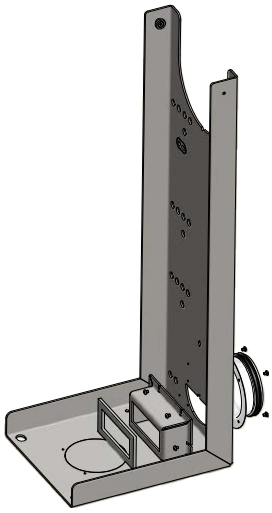

If you want external air supply from the bottom, mount the connecting piece

Please note that the gasket is to be placed in the slot.

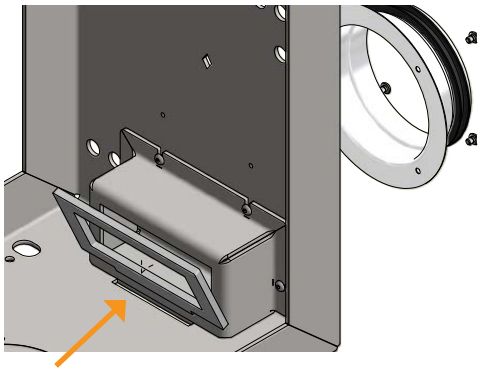

If you DO NOT want an external air supply, remove the round plate with cutting nippers in order to ensure an air flow

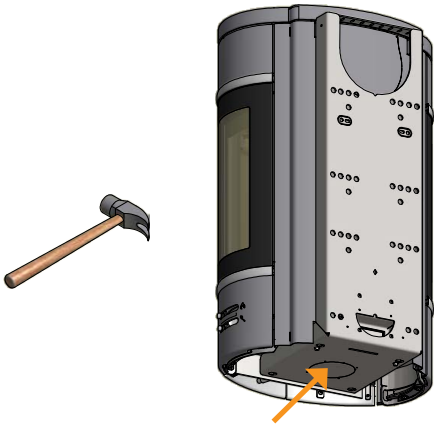

FITTING NATURAL STONE

Scan 68-15 is supplied with loose pieces of natural stone that are fitted to the sides of the stove.

Natural stone is made from a natural material and consequently its pattern and shape may vary.

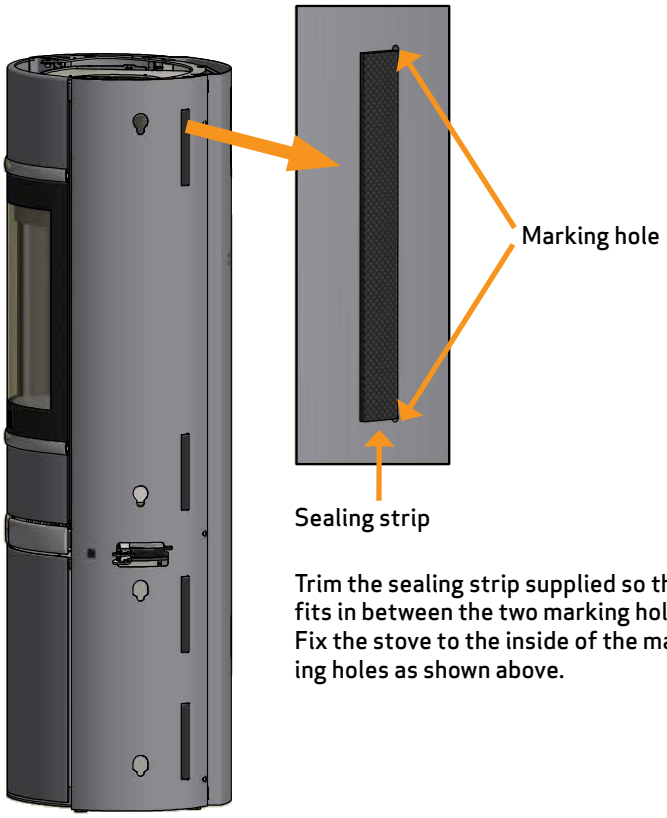

Trim the sealing strip supplied so that it fits in between the two marking holes. Fix the stove to the inside of the marking holes as shown above.

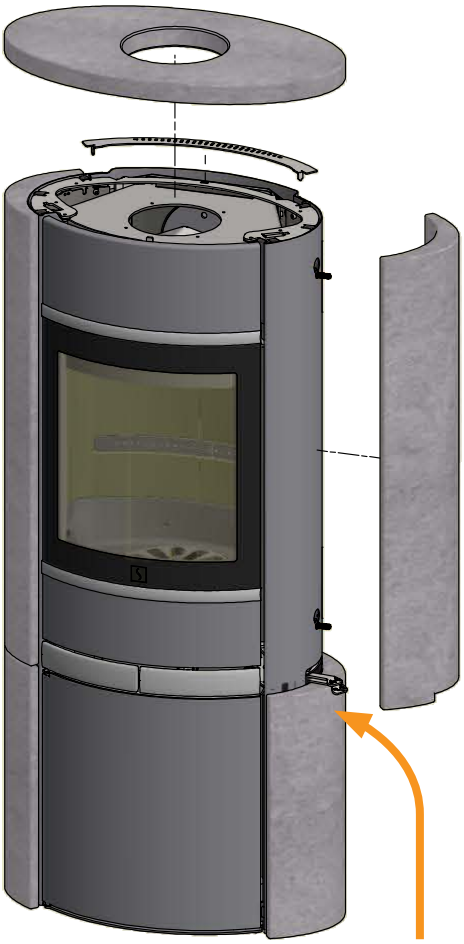

Fix the stones to the stove and the decorative grate and then place the top plate loosely on top.

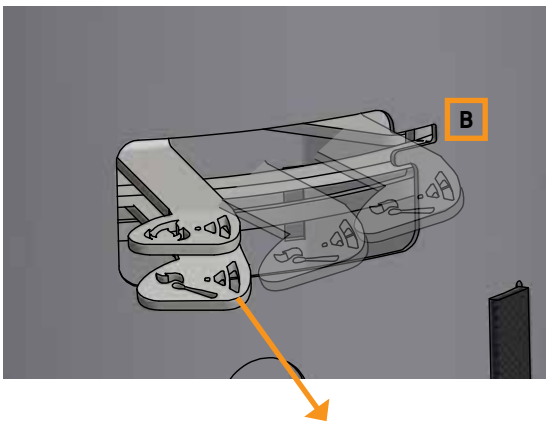

PLEASE NOTE that the bottom damper handle (match) should be moved to position B so there is enough room to fit the stone at the bottom.

INSTRUCTIONS FOR USE

CB-TECHNOLOGY (CLEAN BURN)

The stove is equipped with CB technology. In order to ensure optimal combustion of gases released during the combustion process, air passes through a specially developed system of channels. The heated air is conducted into the combustion chamber through the holes in the rear lining of the combustion chamber and at the baffle plates. This airflow is controlled by the rate of combustion and cannot therefore be regulated.

NOTE: The wood must never be placed higher than the tertiary holes at the rear of the burn chamber (This does not apply at a cold start).

PRIMARY AIR

The primary air is used when lighting the stove and must be closed after 10-20 minutes, when the fire has caught well. The primary air can be used continuously when using very hard wood.

Settings for normal load: 0 - 30%

SECONDARY AIR

Secondary air is pre-heated and fed indirectly to the fire. At the same time, the secondary airflow cleans the glass pane to avoid soot build-up. If you over-restrict the secondary airflow, soot can build up on the glass pane. The secondary airflow determines the heat output from your wood stove.

Settings for normal load: 50 - 70%

BAFFLE PLATE

The baffle plate is located in the upper part of the combustion chamber. The plate holds back smoke, making sure it stays inside the combustion chamber for a longer time before escaping through the chimney. This reduces the flue gas temperature as the gases have more time to dissipate heat to the stove.

The baffle plate must be removed for sweeping; see "Maintenance". Note that the baffle plate is made of porous, ceramic material, and is liable to break easily. You should therefore handle it with care.

The baffle plate is subject to wear and tear and not covered by the warranty.

ASH CONTAINER

- Open the door of the stove to access the ash container under the combustion chamber.
- The ash container must always be closed during operation.
- The ash container must not be overfilled and must therefore be emptied at regular intervals.

THE CLEAN AIR ACT 1993 AND SMOKE CONTROL AREAS

Under the Clean Air Act local authorities may declare the whole or part of the district of the authority to be a smoke control area. It is an offence to emit smoke from a chimney of a building, from a furnace or from any fixed boiler if located in a designated smoke control area. It is also an offence to acquire an "unauthorized fuel" for use within a smoke control area unless it is used in an "exempt" appliance ("exempted" from the controls which generally apply in the smoke control area).

The Secretary of State for Environment, Food and Rural Affairs has powers under the Act to authorize smokeless fuels or exempt appliances for use in smoke control areas in England. In Scotland and Wales this power rests with Ministers in the devolved administrations for those countries. Separate legislation, the Clean Air (Northern Ireland) Order 1981, applies in Northern Ireland. Therefore it is a requirement that fuels burnt or obtained for use in smoke control areas have been "authorized" in Regulations and that appliances used to burn solid fuel in those areas (other than "authorized" fuels) have been exempted by an Order made and signed by the Secretary of State or Minister in the devolved administrations.

- Further information on the requirements of the Clean Air Act can be found here: http://smokecontrol.defra.gov.uk/
- Your local authority is responsible for implementing the Clean Air Act 1993 including designation and supervision of smoke control areas and you can contact them for details of Clean Air Act requirements"
- The secondary air valve has been modified, so that is does not close completely but has an opening corresponding to the position used at the lowest emission test.
- You can use any type of wood as fuel.
- This stove has been recommended as suitable for use in smoke control areas when burning wood.

HANDLE FOR RIDDLING GRATE

The stove is equipped with a riddling grate that - when activated - empties the ashes from the burn chamber into the ash tray.

- The riddling grate must be half open during the firing.

REFUELING ON TO A LOW FIRE BED

If there is insufficient burning material in the fire bed to light a new fuel charge, excessive smoke emission can occur. Refueling must be carried out onto a sufficient quantity of glowing embers and ash that the new fuel charge will ignite in a reasonable period. If there are too few embers in the fire bed, add suitable kindling to prevent excessive smoke.

OPERATION WITH DOOR LEFT OPEN

Operation with the door open can cause excess smoke. The appliance must not be operated with the appliance door left open except as directed in the instructions.

DAMPERS LEFT OPEN

Operation with the air controls or appliance dampers open can cause excess smoke. The appliance must not be operated with air controls, appliance dampers or door left open except as directed in the instructions.

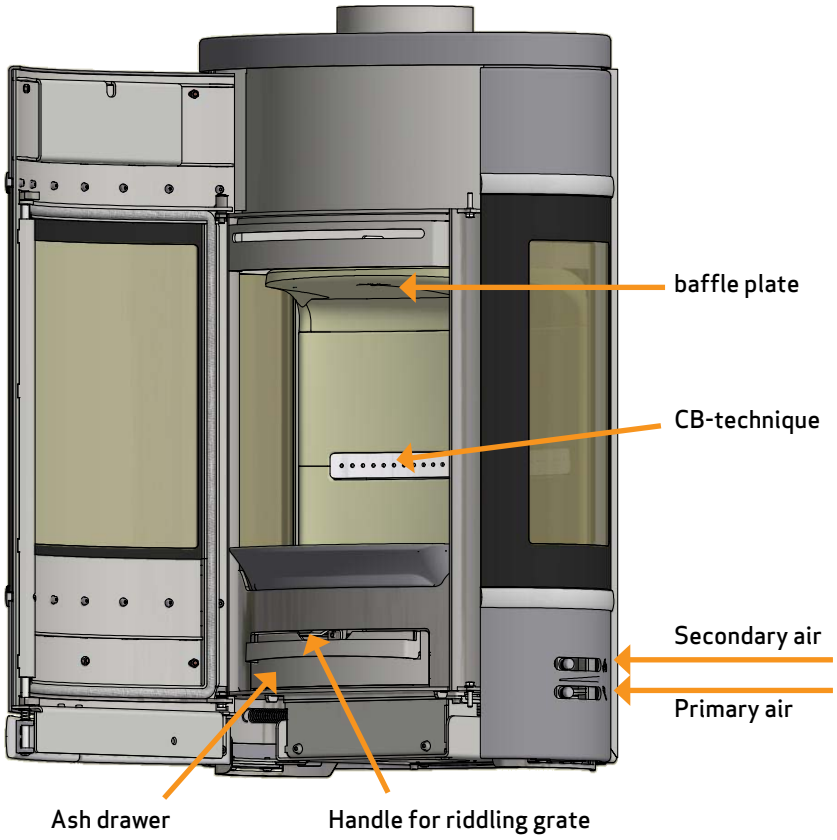

SETTINGS FOR NORMAL LOAD:
Primary air: 0 - 30%
Secondary air: 50 - 70%

Adjustment of air supply

0% 100%

Adjustment of the convection air in the high top

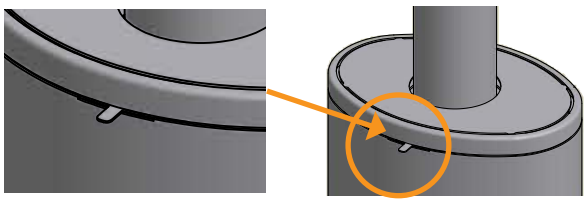

Middle position:
Vent closed

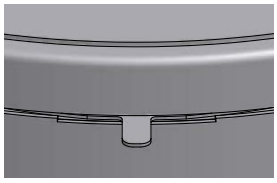

Side position:
Vent open

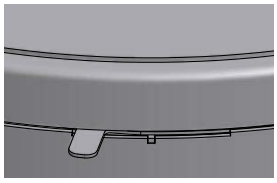

INSTRUCTIONS FOR HEATING

ENVIRONMENTALLY FRIENDLY OPERATION

Avoid turning down your wood-burning stove to the point where no flames are visible from the wood, as this leads to poor combustion and low efficiency. The gases released from the wood will not be burnt off due to the low temperature in the combustion chamber. Some of the gases will condense in the stove and flue system as soot, and this could lead to your chimney catching fire at a later point. The residual smoke which exits the chimney will pollute the surrounding area and cause an unpleasant smell.

NOTE!
No matter how good your chimney is, it will not perform well if you do not use it correctly. Equally, a poor chimney may well give you acceptable results if you use it correctly.

LIGHTING

We recommend the use of fire lighters, or similar products, which are available from your Scan dealer. Using fire lighters helps light the wood more quickly and keeps the combustion process clean.

See our video about correct firing on www.scan-stoves.com or scan the QR-code. Please note that this video is only intended as a guide. You should also follow the instructions in the specific manual for your stove model!

Scan the QR-code and see our video about correct firing.

NOTE: Never use liquid lighting fuels!

"TOP DOWN" LIGHTING

"Top down" lighting is a more environmentally friendly way of lighting the fire and helps to keep the glass area as clean as possible.

Do as follows for a correct "top down" lighting:

- 4 pieces of wood approx. 20-25 cm long with a weight of approx. 0.4-0.5 kg per piece.
- 15-20 thin pieces of firewood of about 20 cm in length, with a total weight of approx. 0.8 kg.
- 4 fire lighters in bag or block form

1. Place the pieces of wood, firewood and fire lighters in the combustion chamber as shown below
2. Set the primary and secondary air controls to maximum in the lighting phase. If the fire is too strong, you may throttle down the primary air damper (at the left)

NOTE: The wood must never be placed higher than the tertiary holes at the rear of the burn chamber (This does not apply at a cold start).

Place the fire lighters between the upper sticks

CONTINUOUS OPERATION

It is important to obtain as high a temperature as possible in the combustion chamber. This results in best possible use of the stove and fuel, as well as achieving clean combustion. In this way you will avoid build-up of soot on the combustion chamber lining and glass pane. During operation, you should not see any smoke; just a movement in the air that indicates combustion is in progress.

- After completing the lighting phase, you should have a good layer of embers in the stove; you can then start operation of it properly
- Add two pieces of wood at a time: they should be about 0,4-0,6 kg in weight and about 20 cm long

NOTE: The wood must catch fire quickly. This is why we recommend setting the primary air flow fully open.

NOTE: Operating the stove at too low a temperature and with too little primary air can lead to gases igniting, which can damage the stove.

- When adding wood, always open the glass door carefully to prevent smoke escaping
- Never add wood, while the fire is burning nicely

WARNING ABOUT OVER-FIRING

If the stove is continiously fired with larger amounts of wood than recommended and/or receives too much air, this can cause a heavy heat development liable to damage both stove and the surrounding walls. We therefore recommend that you always observe the max. recommended amount of fuel (See under "Technical Data").

USING YOUR STOVE IN VARIOUS WEATHER CONDITIONS

The way the wind affects the chimney can have a big impact on how your stove reacts under various wind loads; you may need to adjust the airflow to achieve good combustion. Fitting a damper in the flue pipe may also help, as it will allow you to regulate the draught under changing wind loads. The damper must not close more than 80% of the surface.

Fog and mist can also have a big impact on chimney draught; you may need to use other settings for the combustion air to achieve good combustion.

FIRING IN THE SPRING OR AUTUMN

In the spring/autumn transition period, where there is less need for heating, we recommend you light the stove "top down" once, perhaps adding just two pieces of wood as above to ensure that the combustion chamber lining burns clean again.

THE FUNCTION OF THE CHIMNEY

The chimney is the wood-burning stove's motor; its performance determines how well your stove will work. The draught in the chimney creates negative pressure in the wood-burning stove. The negative pressure draws the smoke out of the stove and takes in air through the combustion air damper to fuel the combustion process. Combustion air is also used for the air wash system that keeps the window clear of soot.

The draught in the chimney is created by the difference in temperature inside and outside the chimney. The higher temperature difference, the better draught. This is why it is important that the chimney reaches operating temperature before you reduce the damper settings to restrict combustion in the stove (a brickwork chimney will take longer to reach operating temperature than a steel chimney). It is very important that the operating temperature is reached as quickly as possible on days when the draught in the chimney is poor due to unfavorable wind and weather conditions. You need to get a few flames going as quickly as possible. Chop the wood extra thin; use an extra fire lighter etc.

- After longer periods without use, you must check the chimney flue for blockages
- You can connect several units to the same chimney. You should however first check the relevant regulations in this respect

CHIMNEY FIRE

In the event of a chimney fire, keep the stove door, the ash container, and all dampers on the stove closed. In an emergency, call the fire service.

- We recommend that you get a chimney sweep to check the chimney before using the stove again.

GENERAL NOTES

PLEASE NOTE! Parts of the wood-burning stove, especially the outer surfaces, become hot during use. Due care should be exercised.

- Never empty ashes into a flammable container. Ashes can contain glowing embers long after you finish operating the stove
- When the stove is not in use you can close the dampers to avoid a draught through the stove
- If the stove has not been used for some time, you should check the flue passageways for potential blockages before relighting
- We advise you strongly not to use the stove over night. The stove is not suited for this purpose

NOTE: Never place flammable material in the radiation zone of the stove!

HANDLING OF THE FUEL

SELECTING WOOD/FUEL

You can use any type of wood as fuel. However harder woods, such as beech or ash, are generally better for heating, as they burn more evenly and create less ash. Other woods, such as maple, birch and spruce, are excellent alternatives.

PREPARATION

The best fuel is obtained where the tree has been felled and the wood sawn and split before May 1st. Remember to cut the wood to match the size of the combustion chamber. We recommend a diameter of 6-10 cm. The length should be about 6 cm shorter than that of the combustion chamber to leave enough space for air to circulate. If the diameter of the wood is greater than the above, it should be split down its length. Wood that has been split dries faster.

STORING

You need to store the sawn and split wood in a dry place for 1-2 years before it will be dry enough to burn. Wood dries faster if you stack it in an airy place. Before using it, it is a good idea to store the wood for a few days at room temperature. Remember that wood absorbs moisture from the air during autumn and winter.

MOISTURE

To avoid problematic impact on the environment and to ensure optimum operating economy, the wood should be perfectly dry before it can be used as fuel. If you use wood that is too damp, most of the heat it produces will be used up in evaporating the water. The stove will accordingly not increase in temperature, nor emit heat to the room as a result. This is obviously poor economy, and it will cause soot build-up on the glass pane, in the stove and in the chimney. Operation using moist wood also pollutes the environment.

- Maximum wood moisture content should not exceed 20%. A moisture content of 15-18% will deliver best efficiency
- An easy way of checking wood moisture content is to knock the ends of the two pieces of wood together. If the wood is moist, the sound will be slightly muffled
- It is a good idea to take the wood into the house a day before it is to be used.

USE OF THE FOLLOWING AS FUEL IS ILLEGAL

NOTE: It is absolutely prohibited to fire with painted, pressure impregnated or glued wood, or sea driftwood.

NOTE: Nor should you ever burn chipboard, plastics, waste or treated paper. These contain substances that are hazardous to human health, to the environment, your stove, and your chimney.

In short - make sure you only use proper wood.

CALORIFIC VALUE OF THE WOOD

The various woods have different calorific values. In other words, for certain species of wood, you will need to use a greater quantity to achieve the same heating performance. This Instuction Manual assumes that you will be using beach, which has a very high calorific value and is also the easiest wood to get hold on. If you use oak or beech as fuel, you need to bear in mind that these wood types have a greater calorific value than for example birch. To avoid any risk of damage to the stove, you should therefore make sure to use less fuel in these cases.

Wood types	kg Drywood/m^3	Compared to beech
Hornbeam	640	110%
Beech/Oak	580	100%
Ash	570	98%
Maple	540	93%
Birch	510	88%
Pine	480	83%
Fir	390	67%
Poplar	380	65%

MAINTAINANCE

SWEEPING THE CHIMNEY AND CLEANING STOVE

Follow national and local regulations for sweeping the chimney. We recommend having the stove cleaned regularly by a chimney sweep.

Before cleaning the stove and sweeping the flue pipe and chimney, we recommend removing the baffle plates.

Make sure the stove is cold before starting maintenance or repair work.

Scan 68 with inspection holes

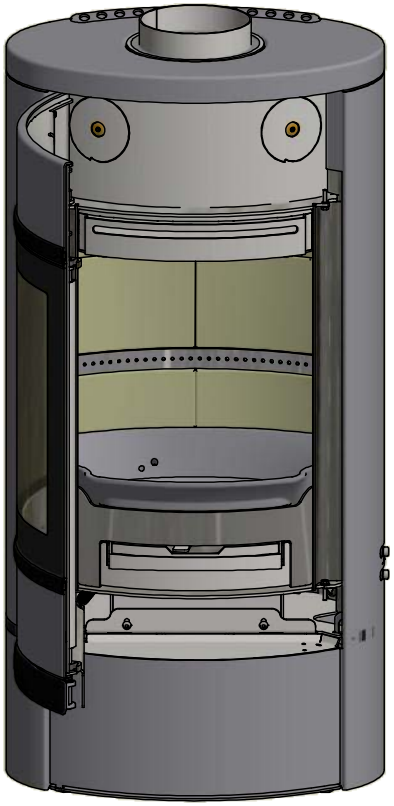

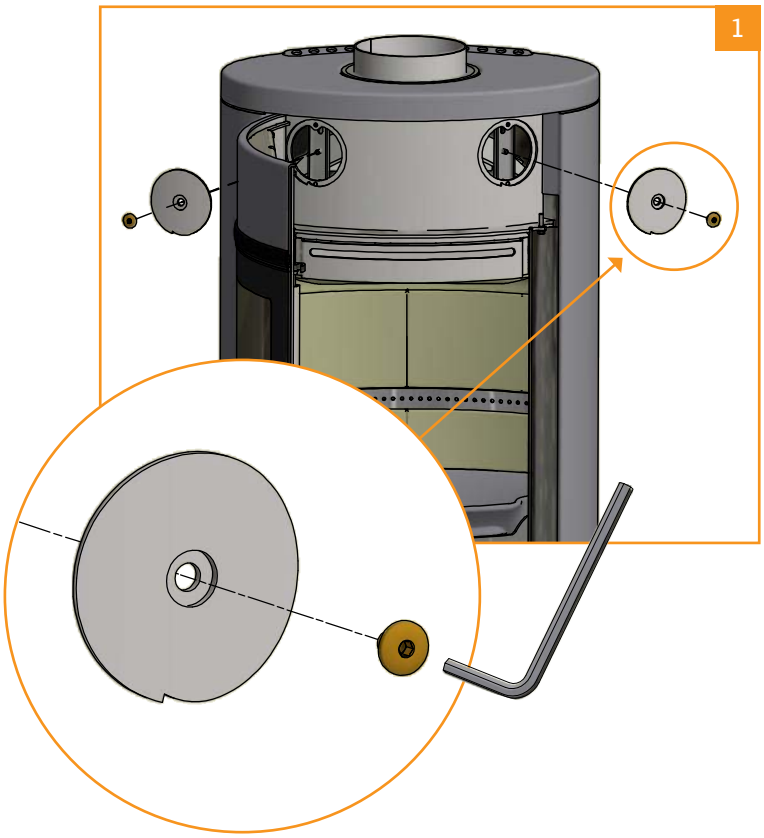

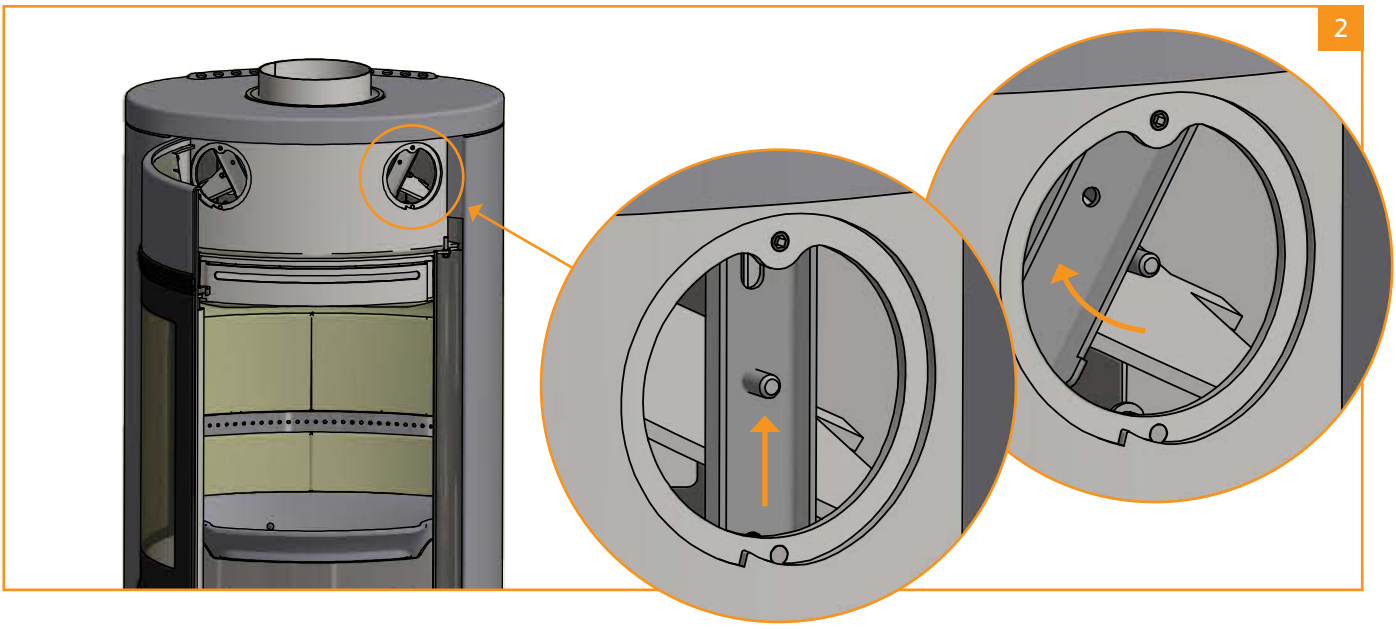

CHECKING THE STOVE

Scan A/S recommends that you check your stove thoroughly after sweeping/cleaning. Check all visible surfaces for cracks. Check that all joints are tight and that the gaskets are correctly seated. Worn or deformed gaskets should be replaced.

SERVICING

Apart from having the chimney swept, your wood-burning stove does not require any regular maintenance. However, we do recommend servicing at least once every two years. We recommend that the stove is thoroughly serviced at least once every two years by a qualified fitter. The service should include the following:

- Lubricate hinges using copper grease
- Check the gaskets. Replace any that are broken or have gone soft
- Check the combustion chamber bottom and riddling grate
- Check heat-insulating materials

COMBUSTION CHAMBER LINING

Slight cracks can appear in the combustion chamber lining due to moisture or sudden heating/cooling. These cracks have no influence on the output or lifetime of your stove. However, if the lining starts to crumble and fall out, you must replace it.

The combustion chamber lining is not covered by the warranty.

MOUNTING OF COMBUSTION CHAMBER

- 7 skamol plates (1-5b) ■ 2 screws ■ 1 baffle plate (6) ■ 1 pin for the baffle plate (7)

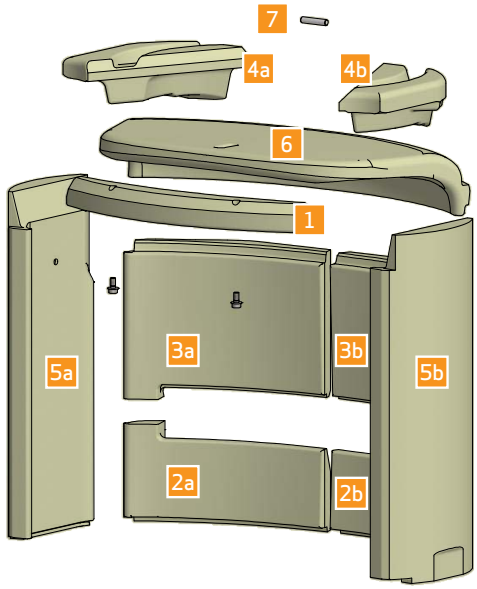

Mount skamol plate 1 with the 2 screws

1

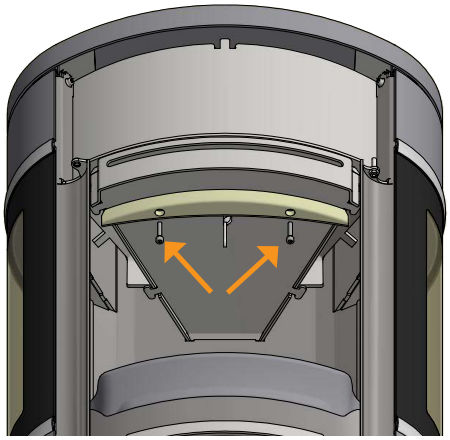

Mount skamol plate 2a and 2b

2

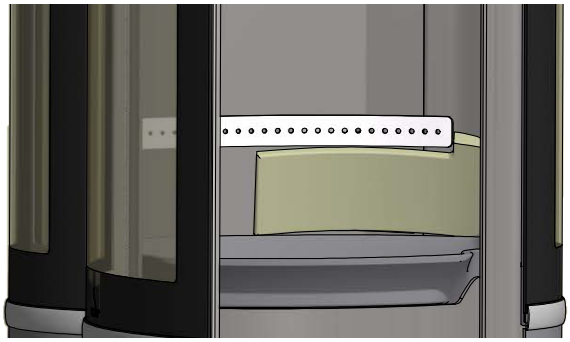

Mount skamol plate 3a and 3b

3

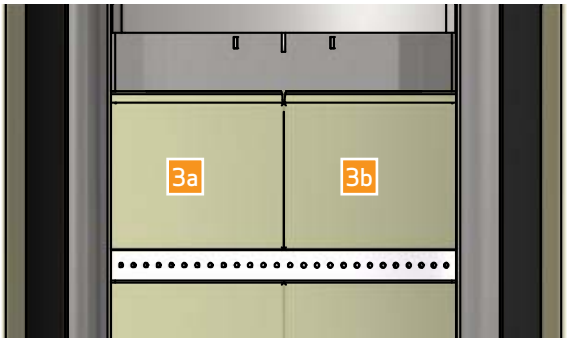

(To be continued on next page)

Mount skamol plate 4a and 4b

4

When skamol plates 1-4 are inserted, it should look like this.
Make sure that the two baffles are placed identically

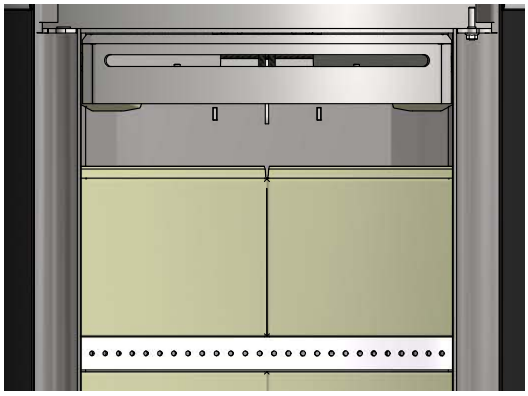

Mount skamol plate 5a and 5b

5

Mount the baffle plate (6) with the accompanying pin (7)

6

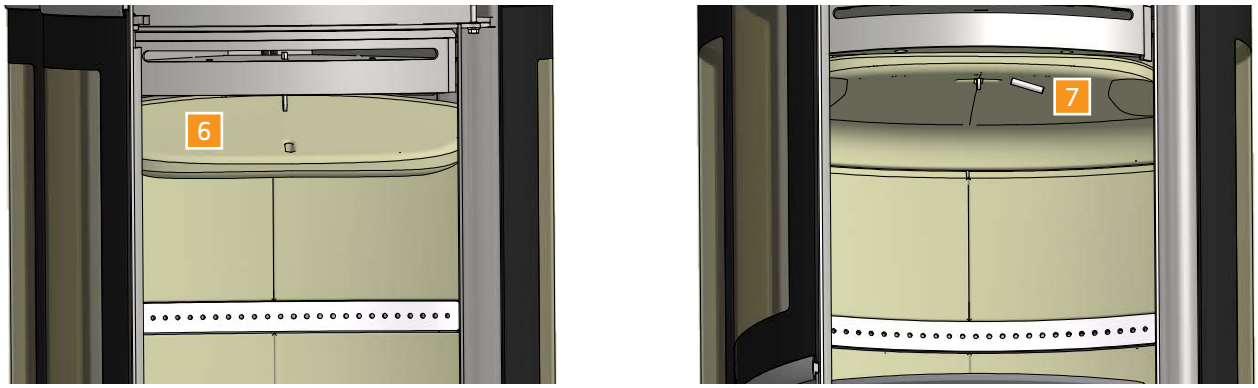

REMOVAL OF THE BAFFLE PLATE

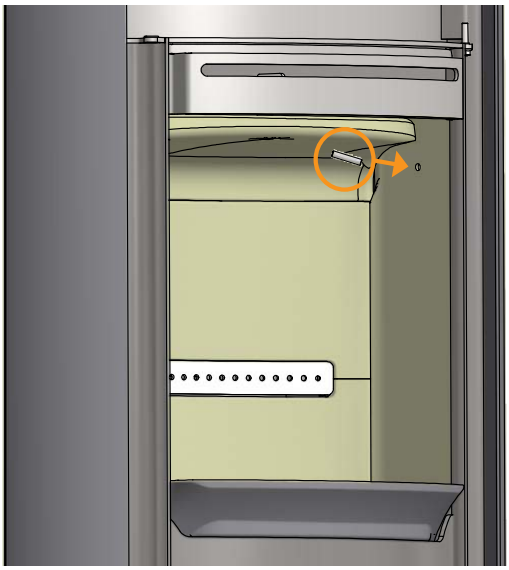

Use the pin in the upper baffle plate to lift the side plate up and out, before removing the baffle plate.

SEALS

All wood-burning stoves have seals made of ceramic material fitted to the stove, the door and/or the glass. These seals are subject to wear and tear and must be replaced when necessary.

Seals are not covered by the warranty.

PAINTED SURFACES

Clean your wood-burning stove by wiping it down with a dry, lint-free cloth.

If the paint finish gets damaged, you can purchase repair paint in spray form from your Scan dealer. As slight differences in color shade are possible, we recommend you spray a larger area to achieve a natural blend. For best results, apply repair spray when the stove is warm enough for you to just keep your hand on it, but no hotter.

NOTE: Be sure to clean air after applying spray paint.

CLEANING THE GLASS

Our wood-burning stoves are designed to prevent serious soot build-up on the glass. The best way to achieve this is to make sure you have a good supply of combustion air. It is also very important that the wood is dry and the chimney correctly dimensioned.

Even if you operate the stove in accordance with our instructions, a slight film of soot may still accumulate on the glass. You can easily remove this film by wiping the glass down with a dry cloth and then with a cloth dampened with glass cleaner.

- The glass cleaner is not to get into contact with the gaskets, as this can discolor the glass permanently.

DISPOSAL OF STOVE PARTS

Steel/cast iron	Send for recycling
Glass	Dispose of as ceramic waste
Combustion chamber lining	Vermiculite and chamotte are not recyclable. Dispose of as waste
Baffle plate	Vermiculite is not recyclable. Dispose of as waste
Gaskets	Dispose of as waste

TROUBLESHOOTING

SMOKE ESCAPING

- Damp wood
- Chimney is not properly dimensioned for the stove
- Is the chimney the right height for its surroundings?
- Chimney not drawing properly
- Check if the smoke gas pipe/chimney are blocked
- Vacuum in room
- At rear outlet, check that the flue pipe does not obstruct the chimney draught
- The door is opened before the embers have burned down sufficiently

WOOD BURNING TOO QUICKLY

- The air valves are set incorrectly
- Inferior firewood (waste wood, pallets etc.)
- The baffle plates is incorrectly mounted or missing
- Chimney too large

SOOT BUILD-UP ON GLASS

- Incorrect secondary airflow setting
- Damp wood
- Inferior firewood (waste wood, pallets etc.)
- Vacuum in room
- Excessive primary air
- Wood pieces too large on lighting
- Chimney not drawing sufficiently

WHITE SHADOW ON THE INSIDE OF THE GLASS

- Over-firing (See "Instructions for heating")
- Vacuum in the room
- Too much primary air

EXCESSIVE SOOT BUILD-UP IN CHIMNEY

- Poor burning (more air required)
- Damp wood

THE SURFACE OF THE STOVE IS TURNING GREY

- Overheating (see instructions for heating)

POOR HEATING PERFORMANCE OF STOVE

- Damp wood
- Inferior wood quality with low fuel value
- Not enough wood
- Baffle plates are not fitted correctly

SMELL AND SOUND OF THE STOVE

- The lacquer on the stove hardens when you use the stove for the first time; this can cause an odour. Open a window or a door for ventilation, and make sure the stove is heated up sufficiently to avoid odours later.
- When heating up and cooling down, the stove may make some clicking noises. These are due to the huge temperature differences to which the material is exposed and do not indicate any product defects.

WARRANTY

All wood-fired Scan products are made of high-quality materials and subject to strict quality controls before leaving the factory. We give a warranty of 5 years on manufacturing errors or defects.

You must quote your stove's product registration number when you contact us or your authorized Scan dealer with a warranty claim.

The warranty covers all parts which in the opinion of Scan A/S require repair or replacement due to manufacturing or construction error

The warranty applies to the original purchaser of the product only, and is not transferable (except on prior sale).

The warranty covers only damage caused by manufacturing or construction errors.

THE FOLLOWING PARTS ARE NOT COVERED BY THE WARRANTY

- Wear and tear parts, such as the combustion chamber liners, baffle plates, riddling grate, glass, and seals (except for defects which were present on delivery).
- Soap stones. This is a natural material, wherefore there might be differences in structure, colour, and form as well as grinding marks. The soap stone can be smoothened with fine grinding paper. Smaller "scars" and holes can be repaired with soap stone powder that you can get at your dealer's.
- Defects caused by external chemical and physical influences during transportation, storage and assembly, or at a later time.
- Soot build-up caused by poor chimney draught, damp wood, or improper use.
- Costs of additional heating in connection with a repair.
- Transport costs.
- Costs for setting up, removing the wood stove.

THIS WARRANTY IS VOID

- In case of incorrect installation (the installer is responsible for observing and complying with legal requirements and local bylaws, along with this Instructions manual for the wood-burning stove and accessories).
- In case of improper use, and/or use of prohibited fuels, non-original spares (see this instructions manual).
- If the product registration number of the stove has been removed or damaged.
- In case of repairs that do not comply with our instructions or instructions by an authorized Scan dealer.
- In case of any manipulation of the original state of this Scan product or its accessories.
- This warranty is only valid in the country to which this Scan product was originally supplied.

Always use original replacement parts, or parts recommended by the manufacturer.

MOUNTING THE UK-SCREW

This screw (M5 x 10) must be placed as shown in the pictures, to prevent secondary air control can be closed completely.

NOTE: After mounting the UK screw the type plate must be changed with the one delivered with this manual.

Open both, secondary and primar air control to mount the screw.

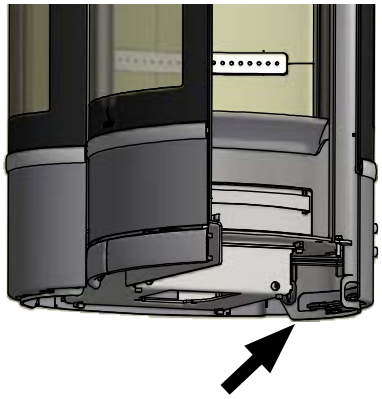

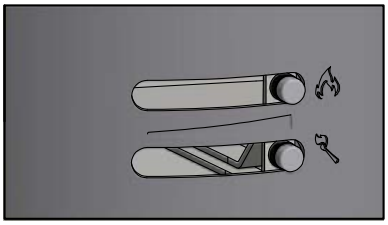

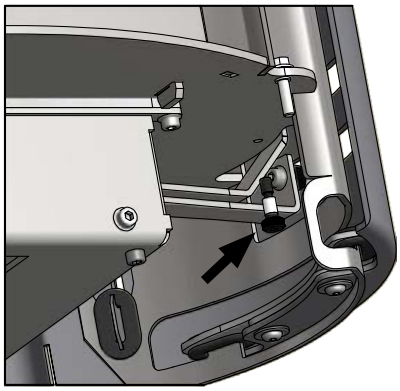

After mounting the UK Screw

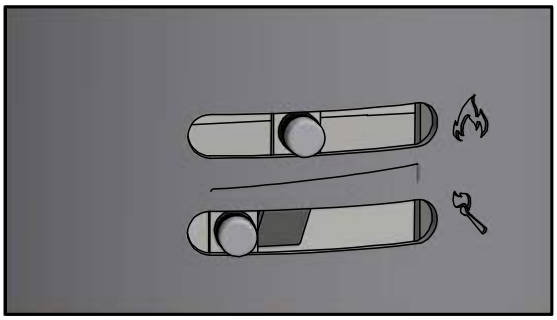

NOTES

Product registration number

Quote this number at all enquiries

Edition:
UK 90068500
10056068-P04
21.08.2023